Job Name: 26-3753 ADS NECC LTV Hub Job Location: Louisville, KY Contractor: ADS Advanced Drainage Systems, Inc.	Plant: Beaver Dam 9/25/2026 12:26:08 PM	Tech: S. Felletter PC: M. Sullivan	

Structure ID: 1

P3 MH036LD10S **MH FLAT TOP SPECIAL (FRAME CAST IN) F/G**

P4) 24" - CASTING HEIGHT - 0"	0 lb
P3) 36" - MH FLAT TOP SPECIAL (FRAME CAST IN) F/G - 10"	896 lb
P2) 36" - MH RISER Custom Ht T/G - 50"	1970 lb
P1) 36" - MH BASE T/n - 30"	2031 lb
1) ASSEMBLY REQUIRED	0 lb
1) JOINT WRAP - 0.065"x6"x50' CONSEAL CS212	0 lb
1) JOINT WRAP PRIMER - CONSEAL CS-75 (1 gal.)	0 lb
1) This Structure Includes a Cast-in Item	0 lb
1) CASTING - HOE MCS-295 F/C	123 lb
2) 36" - Conseal CS-102 1.00"	0 lb
1) 24" - Conseal CS-102 1.00"	0 lb
2) Hole - 16	0 lb

Structure Total:	5020 lb

Structure Notes: .
1. PER ASTM C478 SPECIFICATIONS.
2. CONCRETE = 4,000 PSI AT 28 DAYS.
3. CASTING BY ICAST (HOE MCS-295 F/C "STORM"). CAST-IN.
4. LIFTING ANCHORS TO BE INSTALLED ON THE OUTSIDE OF THE STRUCTURE.
5. P1 BASE & P2 RISER TO BE MECHANICALLY ATTACHED PRIOR TO INTERNAL INSTALLATION/DELIVERY.

.
REINFORCING PER ASTM A615 (GRADE 60).
- TOP SLAB (As .62) #5 BARS AT 6" C.C.E.W.
- RISER/WALLS (As .12)
- FLOOR (As .31) #5 BARS AT 12" C.C.E.W.

NOTES:
1. MANUFACTURED TO ASTM C-478 (LATEST REVISION).
2. CONCRETE: 4,000 PSI AT 28 DAYS.
3. REINFORCING: #5 BAR @ 6" C.C. E.W. (GRADE 60).
4. CASTING: HOE MCS-295 F/C "STORM" BY ICAST. CAST-IN

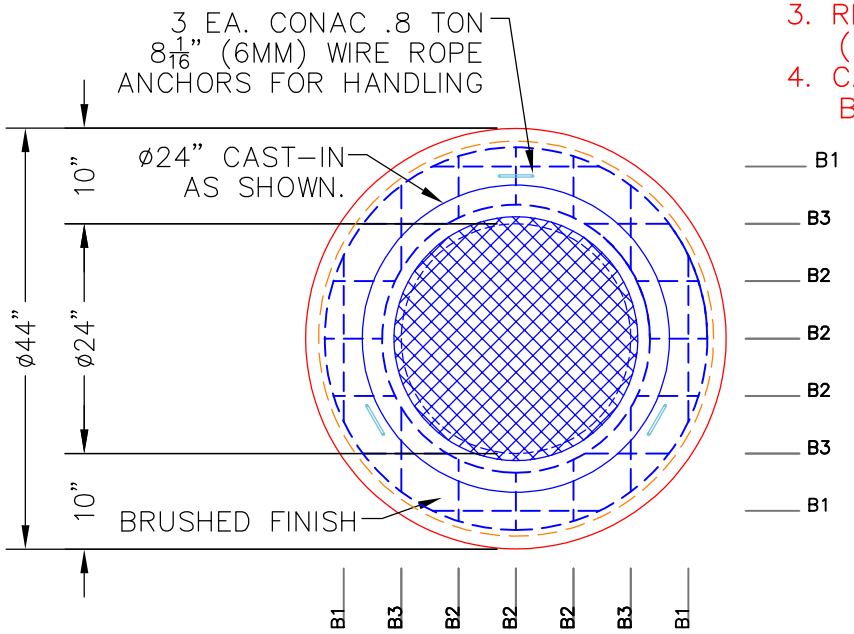

TOP VIEW

REBAR TAKEOFF SUMMARY

BAR	SIZE	LENGTH	QTY
B1	#5	17 in (1'-5")	4 pcs
B2	#5	6 in (0'-6")	12 pcs
B3	#5	9 in (0'-9")	8 pcs
B4	#5	ø40 in (3'-4")	1 pcs
B5	#5	ø28 in (2'-4")	1 pcs

Total Pieces: 26 Pcs
Total Footage: 37.76 LF
Total Weight: 39.38 lbs (0.019 Tons)
TYP SPA = #5 BARS AT 6" C.C.E.W.
12" REBAR OVERLAP FOR CIRCULAR REINFORCEMENT

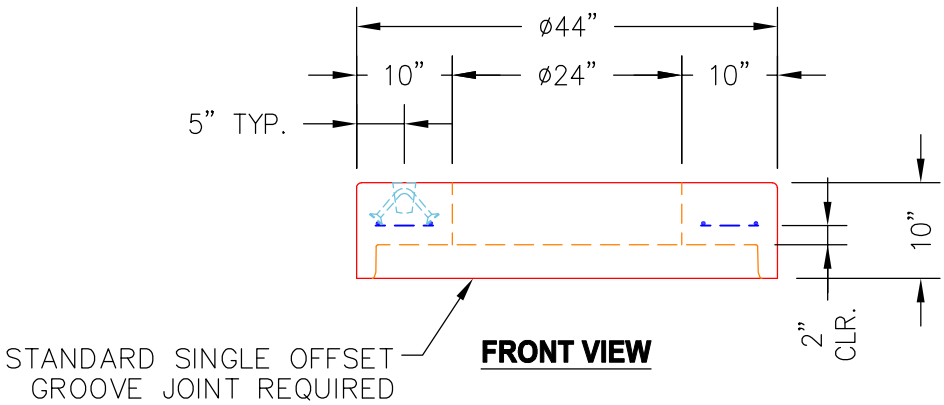

FRONT VIEW

Coating (Int): Coating (Ext):	Seam Up: Flat Seam Dn: Groove	Wall Thickness: 4"	Height (Ext): 10"	Weight (Net): 896 lb Volume (Net): 0.23cu.yd