Job Name: 26-3718 - Telco Handholes Job Location: Lexington, KY Contractor: R E Cook Electrical Co.	Plant: 100 10/12/2026 11:00:37 AM	Tech: Jared - F PC: T. Lewis	

Structure ID: 1 - 1

P1 BX4848-08BAVF **BOX BASE 8inW, 8inF, Variable Ht T/n**

P3) 36" - CASTING HEIGHT - 9"	0 lb
P2) 48" x 48" - BX MONOTOP 8"W/8"T (FB) w/36" Hole F/G - 24"	5035 lb
P1) 48" x 48" - BOX BASE 8inW, 8inF, Variable Ht T/n - 24"	5732 lb
1) CASTING - HOE MC-780 F/C ELECTRIC	675 lb
1) 48" x 48" - Conseal CS-102 1.00" (Double)	0 lb
1) 36" - Conseal CS-102 1.00" (Double)	0 lb
8) 24" x 11" - KO PANEL - 6" THICK n/n - 24" X 11"	0 lb
Structure Total:	11442 lb

Structure Notes: .
1. PER ASTM C913 SPECIFICATIONS.
2. CONCRETE = 5,000 PSI AT 28 DAYS.
3. CASTING BY ICAST (HOE MC-780 F/C ELECTRIC).
4. PULL IRONS, GROUND INSERT AND PLASTIC SUMP w/ COVER BY ICAST.
5. CABLE RACKS & WALL ANCHORS PROVIDED BY OTHERS.

.

REINFORCING PER ASTM A615 (GRADE 60).
- TOP SLAB (As .62) #5 BARS AT 6" C.C.E.W.
- WALLS (As .12) #5 BARS AT 8" C.C.E.W.
- FLOOR OR BTM SLAB (As .12) #5 BARS AT 6" C.C.E.W.

Rim: 5.42' Rim to Invert: 4.59' Slack: 0.04" Sump: 9.96" Step Position:

GENERAL NOTES:
1. MANUFACTURED TO ASTM C-913 (LATEST REVISION).
2. CONCRETE: 5,000 PSI AT 28 DAYS.
3. REINFORCING AS PER ASTM 615: (GRADE 60) – 2" MIN. REBAR CLEARANCE (TYP)
   WALLS – #5 BAR @ 8" E.W. O.C.
   FLOOR OR BOTTOM SLAB – #5 BAR @ 6" E.W.O.C
4. WEIGHT: 24" BASE – 5,732 LBS

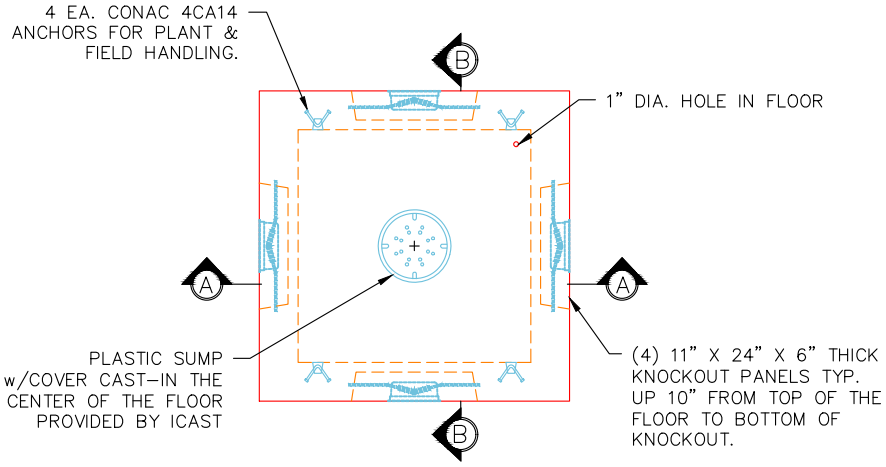

PLAN VIEW
(UPSIDE-DOWN VIEW)

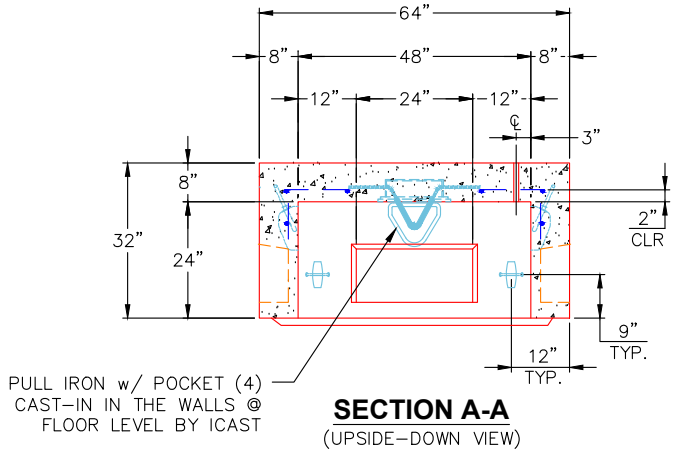

SECTION A-A
(UPSIDE-DOWN VIEW)

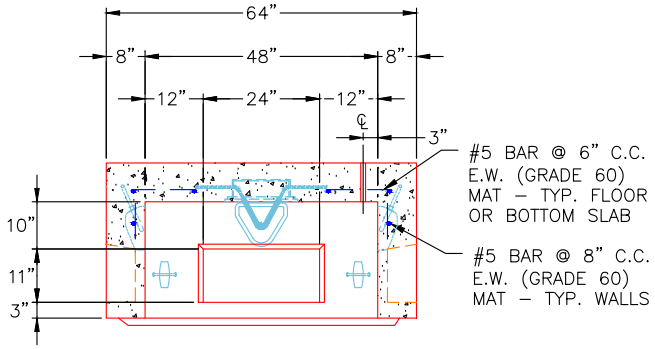

SECTION B-B
(UPSIDE-DOWN VIEW)

Coating (Int): Coating (Ext):	Seam Up: Tongue Seam Dn: n/a	Wall Thickness: 8" Floor Height: 8"	Height (Int): 24" Height (Ext): 32"	Weight (Net): 5732 lb Volume (Net): 1.44cu.yd