Job Name: 26-3632 ADS Wind Dance Farms Ph.2 Job Location: Fisherville, KY Contractor: ADS Advanced Drainage Systems, Inc.	Plant: Beaver Dam 9/18/2026 8:52:24 AM	Tech: S. Felletter PC: M. Sullivan	

Structure ID: WQU 1

P4 MH060LD13CC MH FLAT TOP w/24" Ctr. Hole F/G

P6) 24" - CASTING HEIGHT - 7"	0 lb
P5) 24" - GRADE RING F/F - 4"	270 lb
P4) 60" - MH FLAT TOP w/24" Ctr. Hole F/G - 13"	2674 lb
P3) 60" - MH RISER SPECIAL T/G - 60"	6013 lb
P2) 60" - MH RISER Custom Ht T/G - 40"	4176 lb
P1) 60" - MH BASE Custom Ht T/n - 20"	4821 lb
1) ASSEMBLY REQUIRED	0 lb
1) JOINT WRAP - 0.065"x6"x50' CONSEAL CS212	0 lb
1) JOINT WRAP PRIMER - CONSEAL CS-75 (1 gal.)	0 lb
1) CASTING - HOE MC-375 F/C Storm	271 lb
3) 60" - Conseal CS-102 1.00" (Double)	0 lb
2) 24" - Conseal CS-102 1.00" (Double)	0 lb
2) Hole - 16	0 lb
Structure Total:	18225 lb

Structure Notes: .
1. PER ASTM C478 SPECIFICATIONS.
2. CONCRETE = 4,000 PSI AT 28 DAYS.
3. CASTING BY ICAST (HOE MC-375 F/C "STORM").
4. LIFTING ANCHORS TO BE INSTALLED ON THE OUTSIDE OF THE STRUCTURE.
5. P2 & P3 RISERS TO BE MECHANICALLY ATTACTHED PRIOR TO INTERNALL INSTALLATION/DELIVERY.

.
REINFORCING PER ASTM A615 (GRADE 60).
- TOP SLAB (As .62) #5 BARS AT 6" C.C.E.W.
- RISER/WALLS (As .18)
- FLOOR (As .37) #5 BARS AT 10" C.C.E.W.

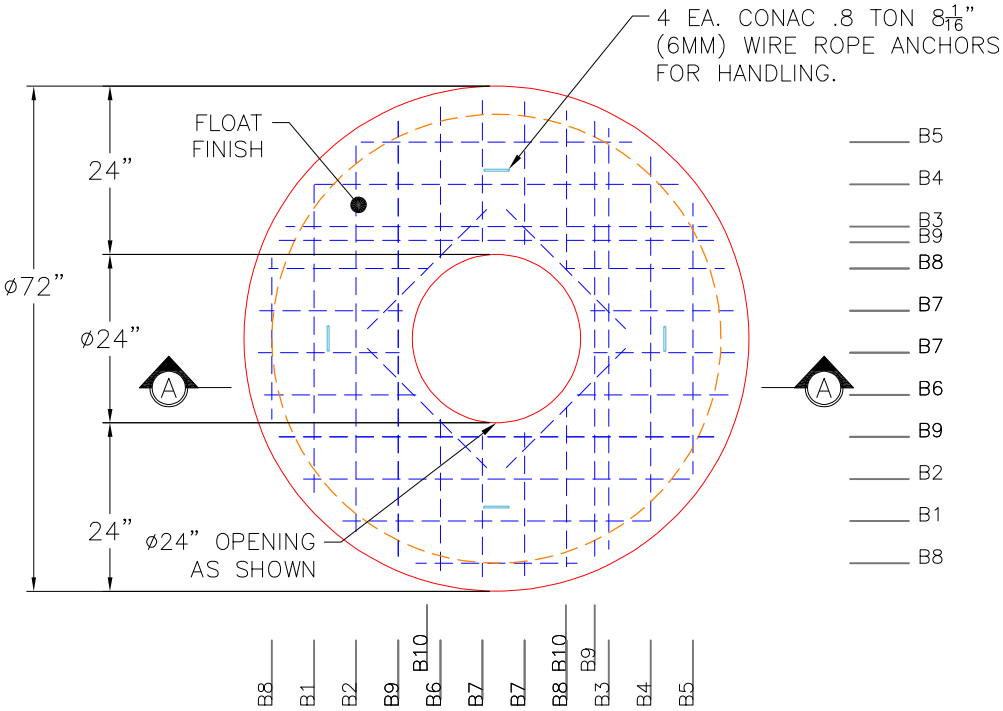

TOP VIEW

GENERAL NOTES:
1. MANUFACTURED TO ASTM C-478 (LATEST REVISION).
2. CONCRETE 4,000 PSI AT 28 DAYS.
3. REINFORCING: #5 @ 6" C.C. E.W. PER ASTM A615 (GRADE 60)

REBAR TAKEOFF SUMMARY

BAR	SIZE	LENGTH	QTY
B1	#5	44 in (3'-8")	2 pcs
B2	#5	55 in (4'-7")	2 pcs
B3	#5	60 in (5'-0")	2 pcs
B4	#5	52 in (4'-4")	2 pcs
B5	#5	39 in (3'-3")	2 pcs
B6	#5	22 in (1'-10")	4 pcs
B7	#5	20 in (1'-8")	8 pcs
B8	#5	23 in (1'-11")	6 pcs
B9	#5	62 in (5'-2")	6 pcs
B10	#5	24 in (2'-0")	4 pcs

Total Pieces: 38 Pcs
Total Footage: 112.58 LF
Total Weight: 117.42 lbs (0.059 Tons)
TYP SPA = #5 BARS AT 6" C.C.E.W.

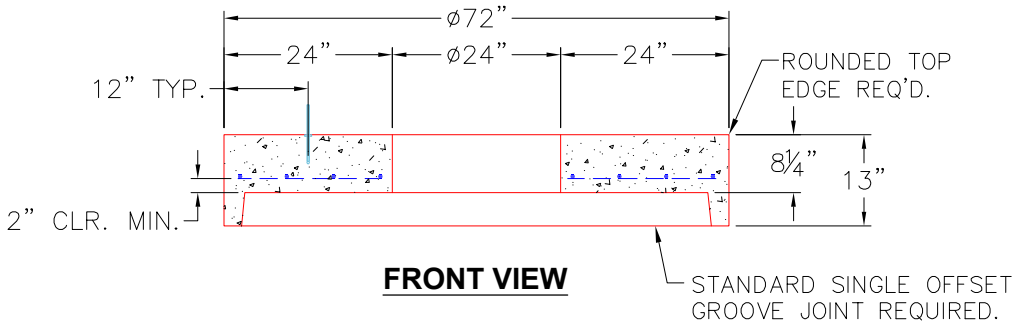

FRONT VIEW

Coating (Int): Coating (Ext):	Seam Up: Flat Seam Dn: Groove	Wall Thickness: 6"	Height (Ext): 13"	Weight (Net): 2674 lb Volume (Net): 0.68cu.yd