Job Name: 26-3471 909917 7Brew Coffee Evansville Job Location: Evansville, IN Contractor: Contech Engineering Solutions	Plant: Beaver Dam 8/26/2026 1:07:43 PM	Tech: S. Felletter PC: C. Goff	

Structure ID: 10-CS-4

P3 MH048LD12-30 MH FLAT LID w/30in ECC Hole F/G

P4) 30" - CASTING HEIGHT - 4"	0 lb
P3) 48" - MH FLAT LID w/30in ECC Hole F/G - 12"	1413 lb
P2) 48" - MH RISER SPECIAL T/G - 60"	3929 lb
P1) 48" - MH BASE T/n - 18"	2588 lb
1) ASSEMBLY REQUIRED	0 lb
1) CVSTENCILING	0 lb
2) 48" - Conseal CS-102 1.00"	0 lb
3) Hole - 16	0 lb
Structure Total:	7930 lb

Structure Notes: .
4" CASTING BY OTHERS
.
LIFTING ANCHORS TO BE INSTALLED ON THE OUTSIDE OF THE STRUCTURE
.
ICAST TO INSTALL THE INTERNALS
.
CONTECH'S LOGO AS WELL AS THE INLET AND OUTLET MUST BE STENCILED ONTO THE STRUCTURE

NOTES:

1. MANUFACTURED TO ASTM C-478 (LATEST REVISION).
2. CONCRETE: 4,000 PSI AT 28 DAYS.
3. REINFORCING: #5 BAR @ 6" C.C. E.W. (GRADE 60).

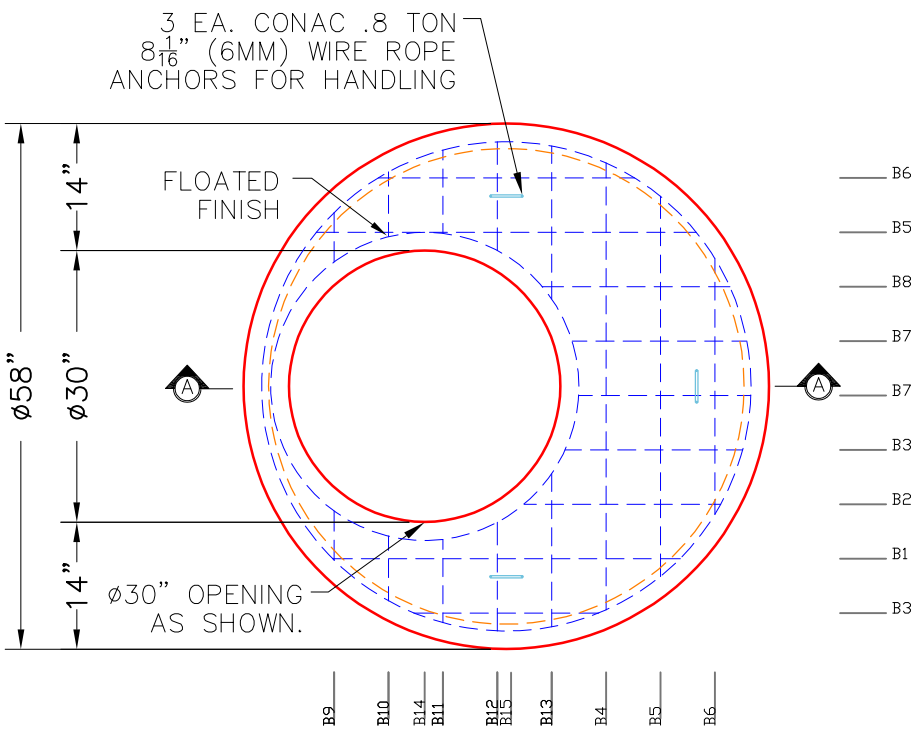

PLAN VIEW

REBAR TAKEOFF SUMMARY

BAR	SIZE	LENGTH	QTY
B1	#5	38 in (3'-2")	1 pcs
B2	#5	22 in (1'-10")	1 pcs
B3	#5	20 in (1'-8")	2 pcs
B4	#5	49 in (4'-1")	1 pcs
B5	#5	42 in (3'-6")	2 pcs
B6	#5	28 in (2'-4")	2 pcs
B7	#5	19 in (1'-7")	2 pcs
B8	#5	21 in (1'-9")	1 pcs
B9	#5	5 in (0'-5")	2 pcs
B10	#5	7 in (0'-7")	2 pcs
B11	#5	9 in (0'-9")	2 pcs
B12	#5	12 in (1'-0")	2 pcs
B13	#5	17 in (1'-5")	2 pcs
B14	#5	ø34 in (2'-10")	1 pcs
B15	#5	ø54 in (4'-6")	1 pcs

Total Pieces: 23 Pcs
Total Footage: 60.57 LF
Total Weight: 63.17 lbs (0.033 Tons)

TYP SPA = #5 BARS AT 6" C.C.E.W.

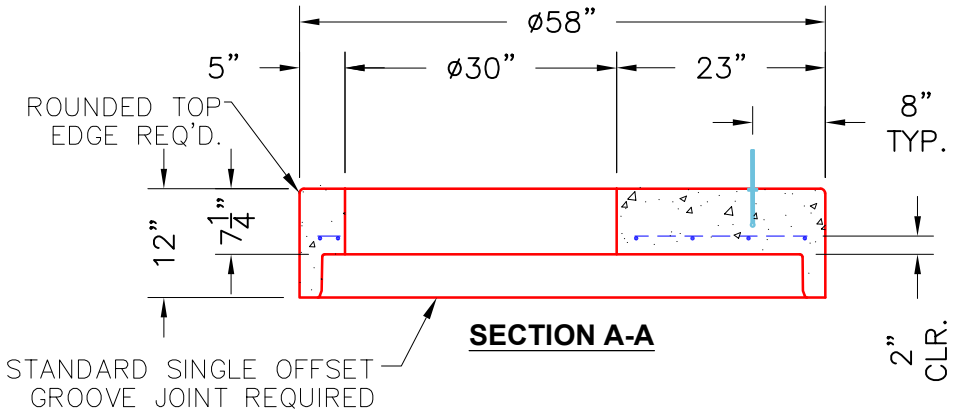

SECTION A-A

Coating (Int): Coating (Ext):	Seam Up: Flat Seam Dn: Groove	Wall Thickness: 5"	Height (Ext): 12"	Weight (Net): 1413 lb Volume (Net): 0.36cu.yd