Job Name: 26-3439 - Vertiv Warehouse Job Location: Ironton, OH 45638 Contractor: J&H Reinforcing & Structural Erectors	Plant: Beaver Dam 9/17/2026 2:22:07 PM	Tech: J. Coppage PC: M. Sullivan	

Structure ID: JB-1

P6 MH048CN36 ECC CONE w/ 24" HOLE

P8) 24" - CASTING HEIGHT - 7"	0 lb
P7) 24" - GRADE RING - 4"	270 lb
P6) 48" - ECC CONE w/ 24" HOLE - 36"	3000 lb
P5) 48" - MH RISER - 60"	4192 lb
P4) 48" - MH RISER - 72"	5030 lb
P3) 120" x 120" - CB TRANSITION SLAB 48" HOLE - 15"	22392 lb
P2) 120" x 120" - BOX RISER 10inW, Variable Ht - 120"	33156 lb
P1) 120" x 120" - P.I.P. BY OTHERS - BTM SLAB - 0"	0 lb
3) 48" - SGL 1"x14.5' Butyl	0 lb
2) DOGHOUSE - 90"x90"	0 lb
1) Hole - 90	0 lb
25) MH Step ML-10-TDS-NCR - 10"	0 lb
Structure Total:	68040 lb

Structure Notes: .

1. JR HOE MC-375 PROVIDED BY ICAST.
2. PER ASTM C913/C478 SPECIFICATIONS.
3. CONCRETE = 4,000 PSI AT 28 DAYS.
4. REINFORCEMENT PER ASTM A615 (GRADE 60)
- 48" CONE (As .12)
- 48" RISER (As .12)
- TRANS SLAB
-- TOP MAT: #4 BAR @ 10"
-- BOT. MAT: #5 BAR @ 6"
- WALLS: DBL MATS #5 BAR @ 8" O.C.E.W.
5. BOTTOM RISER (P2) TO BE DELIVERED W/ THE STYROFOAM & REBAR IN PLACE FOR INV. #3 OPENING & REMOVED IN THE FIELD BY OTHERS ONCE IT IS SET IN PLACE.

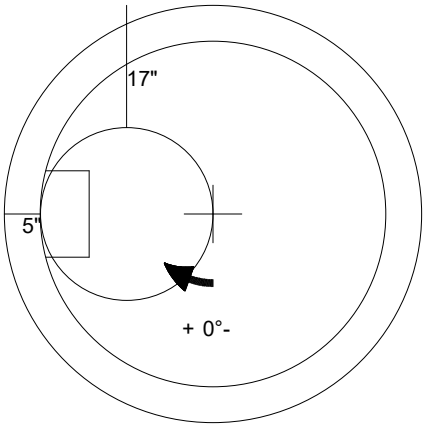

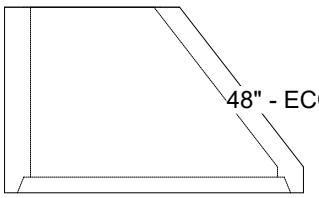

48" - ECC CONE w/ 24" HOLE - 36" - (P6)

Coating (Int): Coating (Ext):	Seam Up: Flat Seam Dn: Groove	Wall Thickness: 5"	Height (Ext): 36"	Weight (Net): 3000 lb Volume (Net): 0.5cu.yd