Job Name: 26-3280 - G.N. Miles Estates Subdivision Ph.4
Job Location: Nicholasville, KY
Contractor: PECCO, Inc.

PC: A. Chambers
TECH: Jared - F
Plant: 100

Structure ID: **D2 SS-MH**

Spec: Sanitary	Rim: 934.84'	Sump: 2"	Floor (Bot): 926.543'
Type: SAN.MH w/ConBlock-CDA Red	Invert: 927.21'	Floor (Top): 927.043'	Overall Height: 8.083'
Size: 48"	Rim to Invert: 7.63'	Floor Height: 6"	Slack: 2.56"

Structure Notes: .
1. PER ASTM C478 SPECIFICATIONS.
2. CONCRETE = 4,000 PSI AT 28 DAYS.
3. ADMIXTURE = CONBLOCK CDA RED.
4. CASTING BY ICAST (HOE MC-315 F/C SANITARY).

.
REINFORCING PER ASTM A615 (GRADE 60).
- CONE (As .12)
- RISER/WALLS (As .12)
- FLOOR (As .31) #5 BARS AT 12" C.C.E.W.

STRUCTURE SUMMARY:

P4) 24" - CASTING HEIGHT - 7"	0 lb
P3) 48" - ECC CONE w/ 24" HOLE, w/ConBlock-CDA Red - 30"	1961 lb
P2) 48" - MH RISER w/ConBlock-CDA Red - 24"	1677 lb
P1) 48" - MH BASE w/ConBlock-CDA Red - 30"	3330 lb
1) JOINT WRAP - 0.065"x6"x50' CONSEAL CS212	0 lb
1) JOINT WRAP PRIMER - CONSEAL CS-75 (1 gal.)	0 lb
1) 48" - MH INVERT CHANNEL w/ConBlock-CDA Red - FULL HEIGHT	1440 lb
1) CASTING - HOE MC-315 F/C Sanitary	258 lb
2) 48" - Conseal CS-102 1.00" (Double)	0 lb
1) 24" - Conseal CS-102 1.00" (Double)	0 lb
2) PSX - 12-08 NYLO	16 lb
7) MH Step ML-10-TDS-NCR - 10"	0 lb
Structure Total:	8682 lb

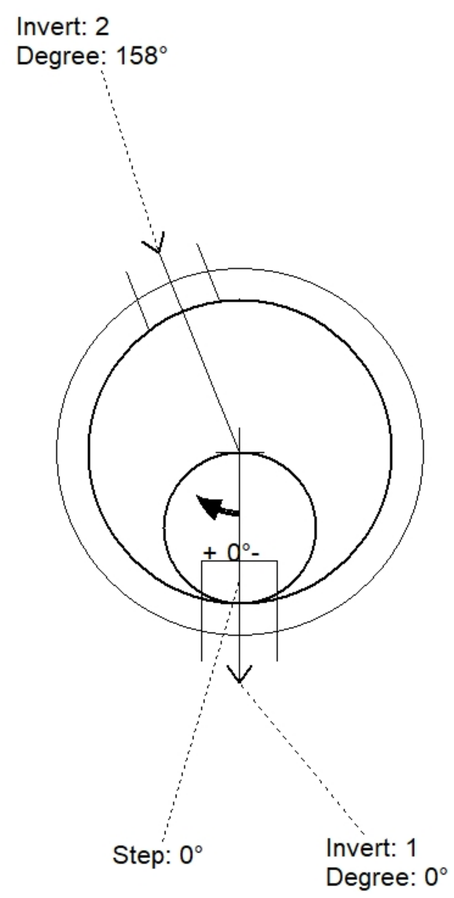

Position	Elev	Angle	Pipe	Pipe OD	Hole	Connector	Up (_)	Ref
Rim	934.84'							
Reducer								
Invert 1	927.21'	0°	8" PVC SDR35	8.5"	12"	PSX 12-08 NYLO	0"	P1
Invert 2	927.31'	158°	8" PVC SDR35	8.5"	12"	PSX 12-08 NYLO	1.2"	P1
Invert 3								
Invert 4								
Invert 5								
Invert 6								
Invert 7								
Invert 8								

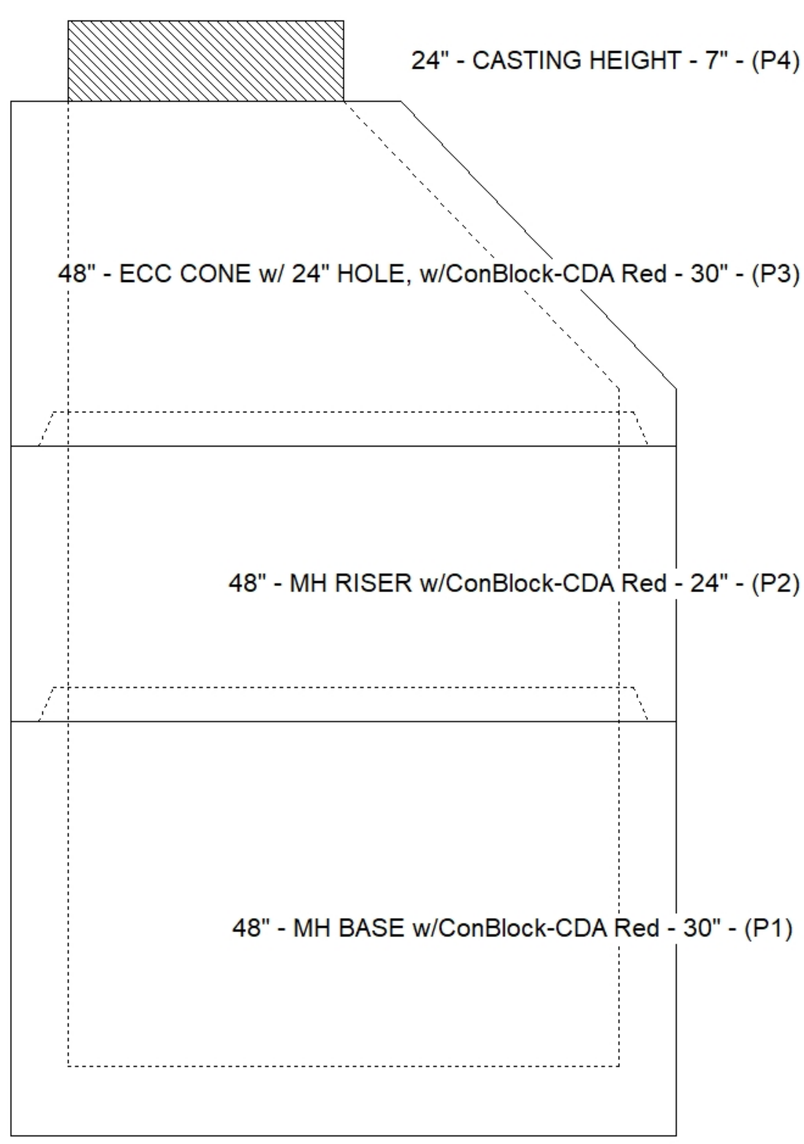

Default - Interior Dimensions

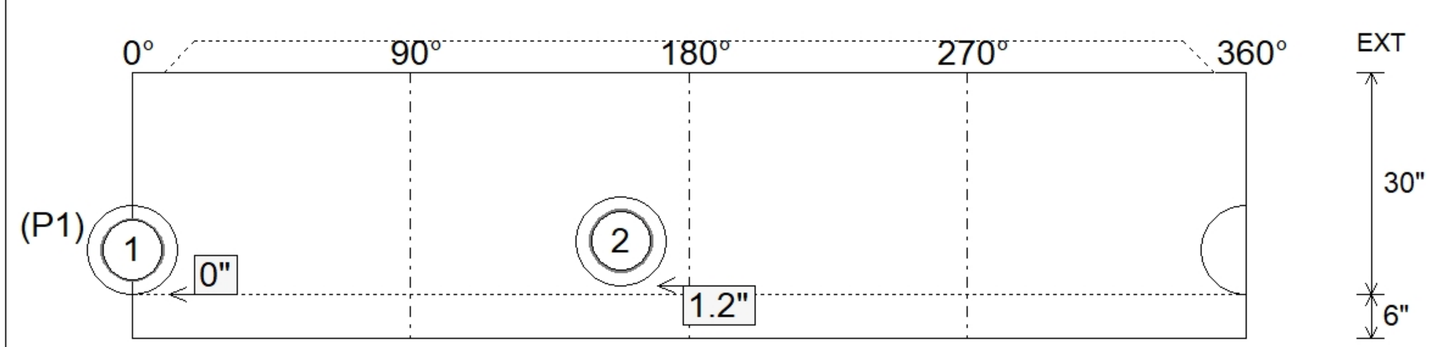

Submittal Drawing
8/27/2026 12:16:19 PM

SUBMITTAL
APPROVED BY: