Job Name: 26-3112 Gunn Hill Subdivision
Job Location: CPU
Contractor: Greg Gunn

PC: E. Bradley
TECH: S. Felletter
Plant: Beaver Dam

Structure ID: **MH-A2 SS-MH**

Spec: Sanitary	Rim: 4.5'	Sump: 2"	Floor (Bot): -0.667'
Type: SAN.MH w/Xypex	Invert: 0'	Floor (Top): -0.167'	Overall Height: 5.167'
Size: 48"	Rim to Invert: 4.5'	Floor Height: 6"	Slack: 0"

Structure Notes: .
1. PER ASTM C478 SPECIFICATIONS.
2. CONCRETE = 4,000 PSI AT 28 DAYS.
3. INVERT CHANNEL TO BE POURED IN THE FIELD BY OTHERS.
.
REINFORCING PER ASTM A615 (GRADE 60).
- RISER (As .12)
- FLOOR (As .31) #5 BARS AT 12" C.C.E.W.

STRUCTURE SUMMARY:

P1)	48" - MH BASE Custom Ht, w/XYPEX T/n - 56"	5147 lb
1)	JOINT WRAP - 0.065"x6"x50' CONSEAL CS212	0 lb
1)	JOINT WRAP PRIMER - CONSEAL CS-75 (1 gal.)	0 lb
1)	48" - Conseal CS-102 1.00" (Double)	0 lb
2)	PSX - 12-08 NYLO	16 lb
5)	MH Step ML-10-TDS-NCR - 10"	0 lb
	Structure Total:	5163 lb

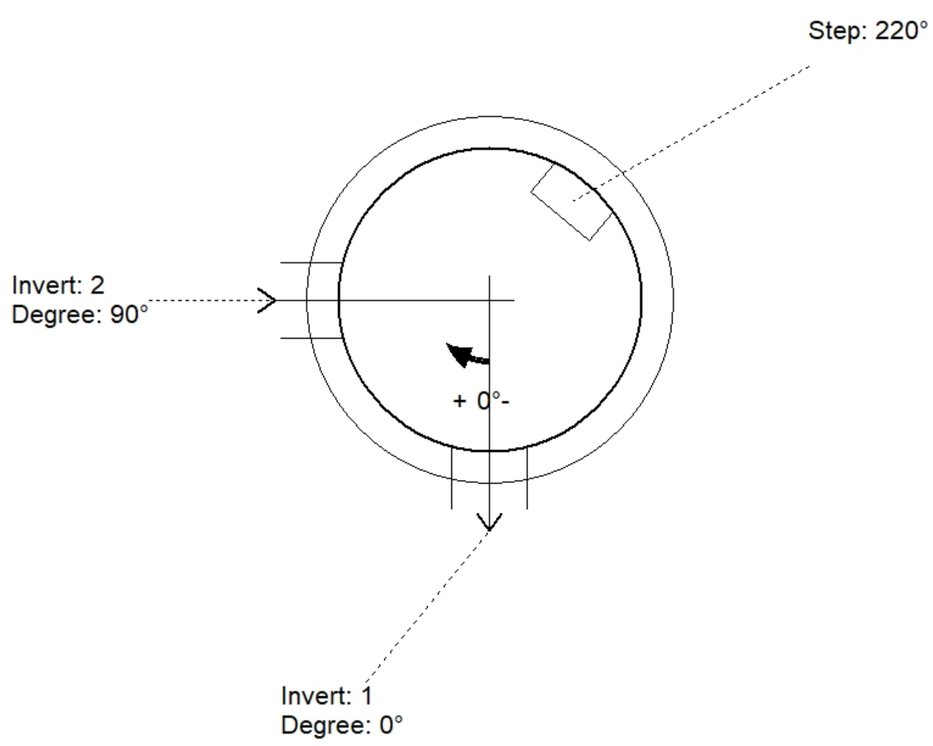

Position	Elev	Angle	Pipe	Pipe OD	Hole	Connector	Up (_)	Ref
Rim	4.5'							
Reducer								
Invert 1	0'	0°	8" PVC SDR35	8.5"	12"	PSX 12-08 NYLO	0"	P1
Invert 2	2'	90°	8" PVC SDR35	8.5"	12"	PSX 12-08 NYLO	24"	P1
Invert 3								
Invert 4								
Invert 5								
Invert 6								
Invert 7								
Invert 8								

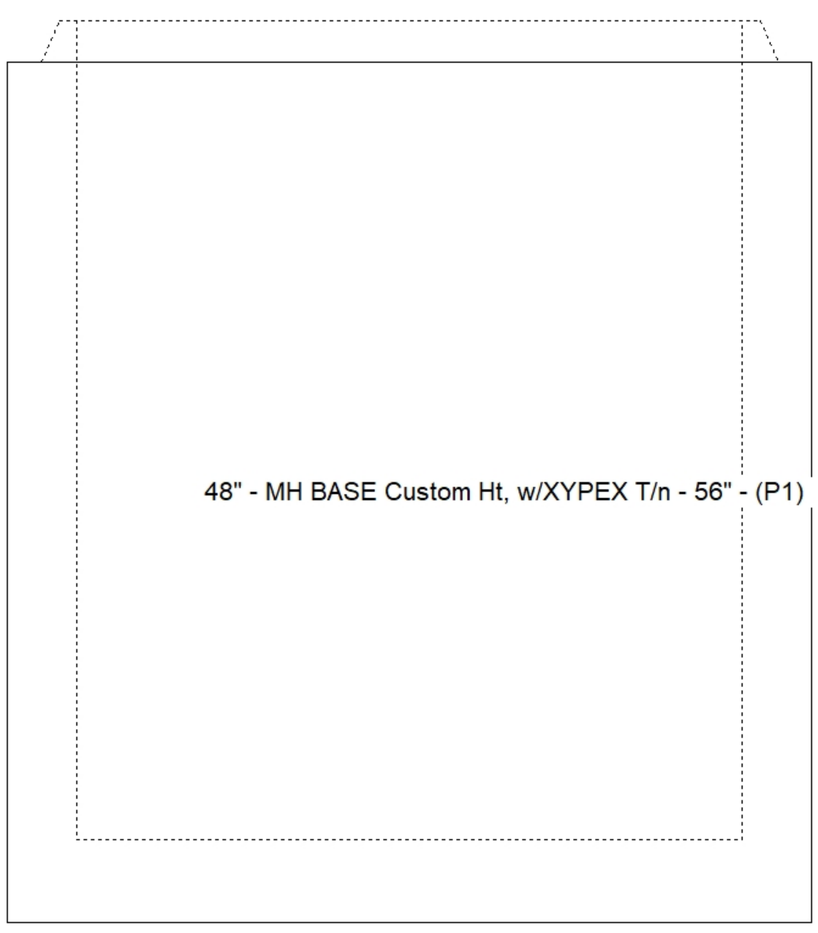

Default - Interior Dimensions

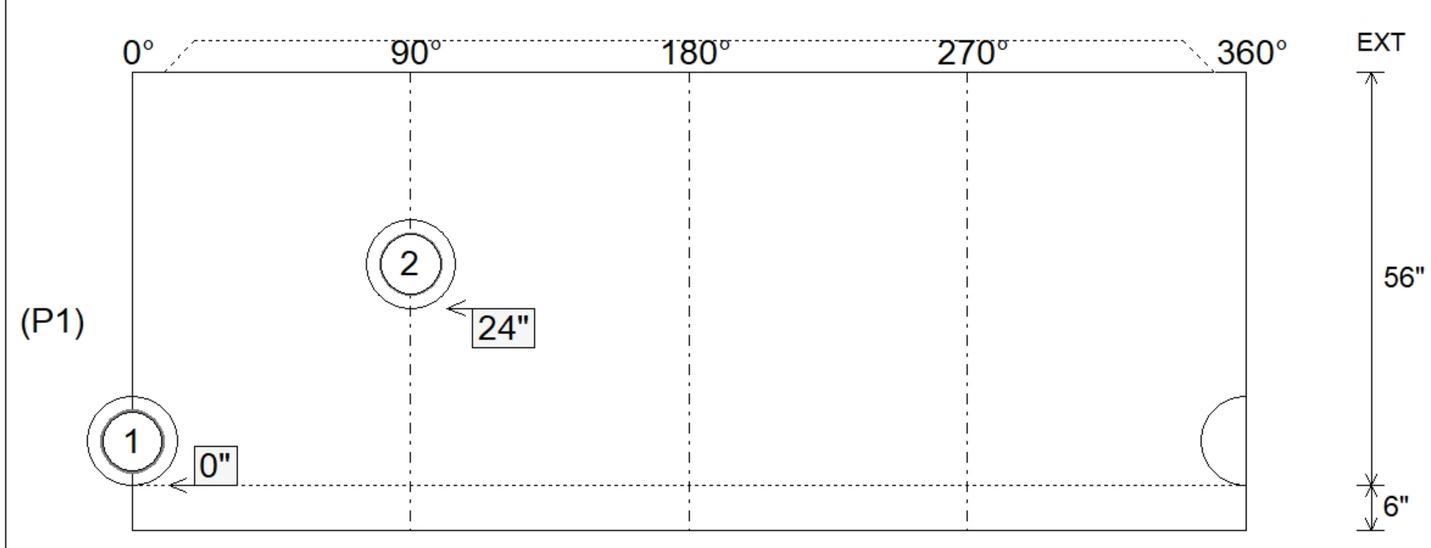

Submittal Drawing
8/26/2026 12:43:05 PM

SUBMITTAL
APPROVED BY: