Job Name: 26-3108 Proximo
Job Location: Lawrenceburg, IN
Contractor: Dave Omara Contractor, Inc.

PC: M. Sullivan
TECH: S. Felletter
Plant: Beaver Dam

Structure ID: **QL1**

Spec: KO BOXES	Rim: 9'	Sump: 108"	Floor (Bot): -0.667'
Type: BX 8inW, 8inF	Invert: 9'	Floor (Top): 0'	Overall Height: 9.667'
Size: 36" x 36"	Rim to Invert: 0'	Floor Height: 8"	Slack: 0"

Structure Notes: 1. PER ASTM C913 SPECIFICATIONS.
2. CONCRETE = 4,000 PSI AT 28 DAYS.
3. NO INVERT CHANNEL.
4. REINFORCING PER ASTM A615 (GRADE 60).
- TOP SLAB (As .62) #5 BARS AT 6" C.C.E.W.
- WALLS (As .12) #5 BARS AT 12" C.C.E.W.
- FLOOR (As .12) #5 BARS AT 12" C.C.E.W.

STRUCTURE SUMMARY:

P4) 36" x 36" - CASTING HEIGHT - 3"	0 lb
P3) 36" x 36" - GRADE RING F/F - 3"	354 lb
P2) 36" x 36" - BOX RISER 8inW F/F - 60"	7089 lb
P1) 36" x 36" - KNOCKOUT BASE 8"W/F - STOCK F/n - 42"	6777 lb
3) 36" x 36" - Conseal CS-102 1.00"	0 lb
Structure Total:	14221 lb

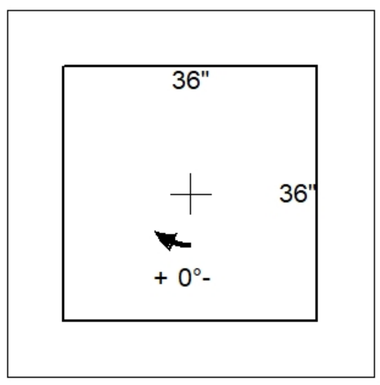

Position	Elev	Angle	Pipe	Pipe OD	Hole	Connector	Up (_)	Ref
Rim	9'							
Reducer								
Invert 1								
Invert 2								
Invert 3								
Invert 4								
Invert 5								
Invert 6								
Invert 7								
Invert 8								

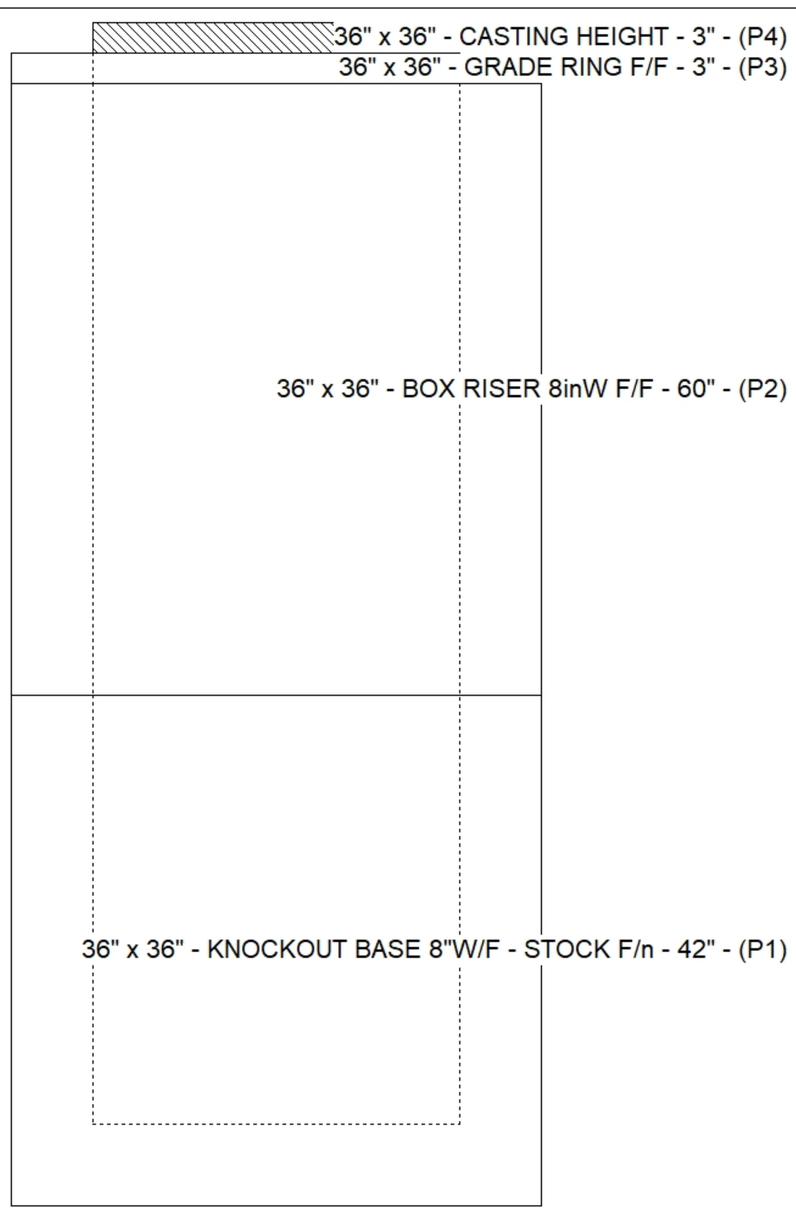

Default - Interior Dimensions

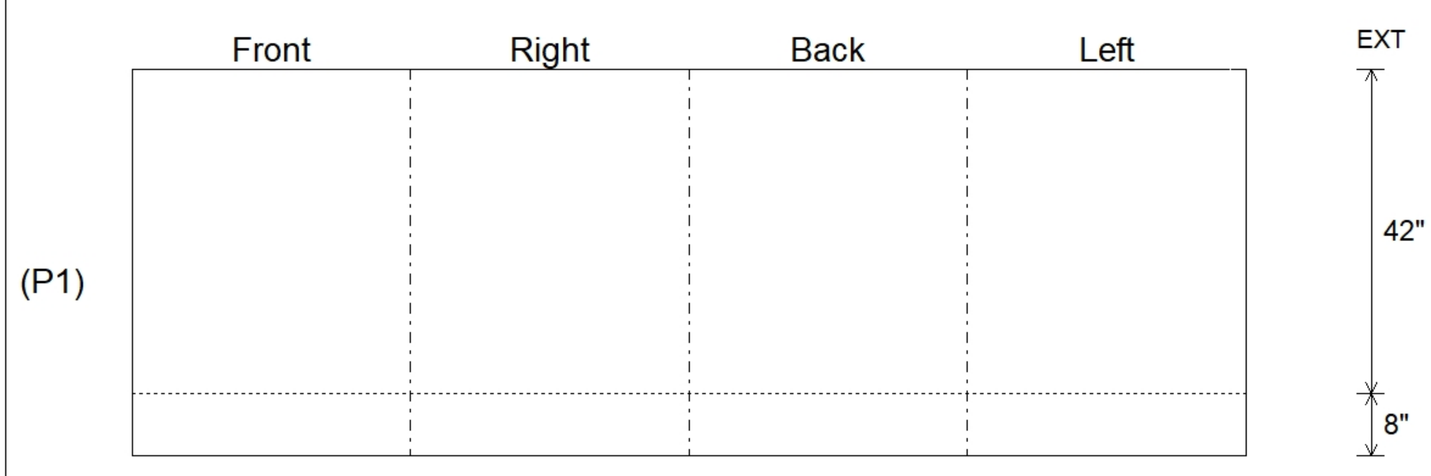

Submittal Drawing
7/23/2026 11:20:11 AM

SUBMITTAL
APPROVED BY: