Job Name: 26-3000B Whispering Cedars At Black Oaks Job Location: Clarksville, TN Contractor: Byard Construction, LLC	Plant: Beaver Dam 9/30/2026 8:09:57 AM	Tech: J. Coppage PC: A. Chambers	

Structure ID: K ST-DCI

P1 MH072BAVF MH BASE Custom Ht

P3) 24" x 68" - CASTING HEIGHT - 6"	0 lb
P2) 72" - MH FLAT TOP w/24"x68" Hole - 10"	3505 lb
P1) 72" - MH BASE Custom Ht - 38"	8497 lb
2) CASTING - JBS 3080-V SET (F/G/H)	1000 lb
1) 72" - Conseal CS-102 1.00"	0 lb
1) Hole - 32	0 lb
2) Hole - 22	0 lb
3) MH Step ML-10-TDS-NCR - 10"	0 lb

Structure Total:	13001 lb

Structure Notes: .
1. JBS 3080 DOUBLE VANE SET BY ICAST.
2. PER ASTM C478 SPECIFICATIONS.
3. CONCRETE = 4,000 PSI AT 28 DAYS.
4. REINFORCING PER ASTM A615 (GRADE 60).
- TOP SLAB (As .62) #5 BARS AT 6" C.C.E.W..
- RISER/WALLS (As .18)
- FLOOR (As .37) #5 BARS AT 10" C.C.E.W.

Rim: 513.7' Rim to Invert: 4.41' Slack: 0.82" Sump: 1.9" Step Position: 90

Position	Elev	Angle	Ext. (cw)	Pipe	Pipe OD	Connector	Hole	Horz Size	Up (_)	Offset
Invert 1	509.29'	0°	0"	24" HDPE	27.8"	Hole 32	32"	33.16"	0"	0"
Invert 2	509.39'	158°	118.578"	18" CMP	19"	Hole 22	22"	22.358"	2.6"	0"
Invert 3	509.39'	234°	175.615"	18" CMP	19"	Hole 22	22"	22.358"	2.6"	0"
Invert 4										
Invert 5										
Invert 6										
Invert 7										
Invert 8										

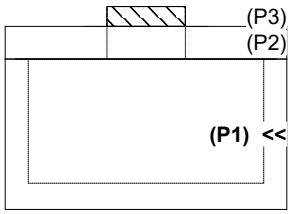

RIGHT-SIDE UP VIEW (int. dimensions)

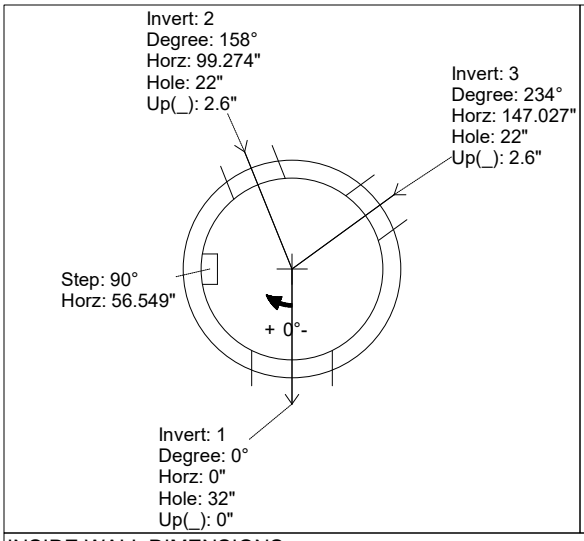

UPSIDE-DOWN VIEW (int. dimenions)

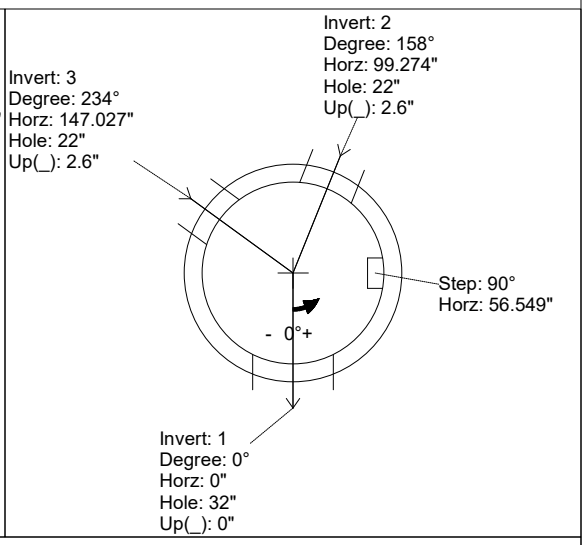

INSIDE WALL DIMENSIONS

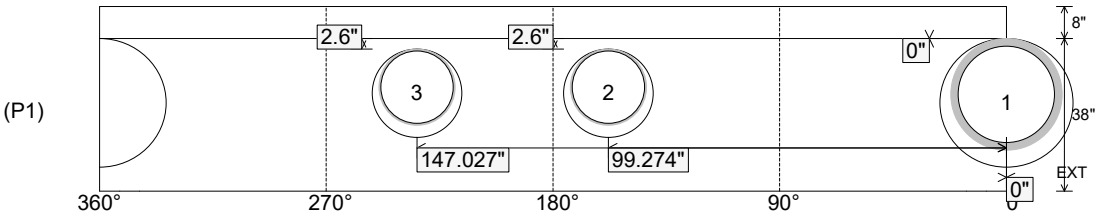

Coating (Int): Coating (Ext):	Seam Up: Flat Seam Dn: n/a	Wall Thickness: 7" Floor Height: 8"	Height (Int): 38" Height (Ext): 46"	Weight (Net): 8497 lb Volume (Net): 2.17cu.yd