Job Name: 26-3000 - Whispering Cedars at Black Oaks Job Location: Clarksville, TN 37042 Contractor: Byard Construction, LLC	Plant: 100 9/24/2026 11:26:27 AM	Tech: Jared - F PC: A. Chambers	

Structure ID: B1 SS-MH

P3 MH048CN42CDARED ECC CONE w/ 24" HOLE, w/ConBlock-CDA Red F/G

P4) 24" - CASTING HEIGHT - 6"	0 lb
P3) 48" - ECC CONE w/ 24" HOLE, w/ConBlock-CDA Red F/G - 42"	3116 lb
P2) 48" - MH RISER w/ConBlock-CDA Red T/G - 72"	5030 lb
P1) 48" - MH BASE w/ConBlock-CDA Red T/n - 30"	3330 lb
1) JOINT WRAP - 0.065"x6"x50' CONSEAL CS212	0 lb
1) JOINT WRAP PRIMER - CONSEAL CS-75 (1 gal.)	0 lb
1) 48" - MH INVERT CHANNEL w/ConBlock-CDA Red - FULL HEIGHT	1440 lb
1) ADMIXTURE CONBLOCK CDA RED	0 lb
1) CASTING - JBS 1155 F/C SANITARY	250 lb
2) 48" - Conseal CS-102 1.00" (Double)	0 lb
1) 24" - Conseal CS-102 1.00" (Double)	0 lb
2) PSX - 12-08 NYLO	16 lb
12) MH Step ML-10-TDS-NCR - 10"	0 lb
Structure Total:	13182 lb

Structure Notes: .

1. PER ASTM C478 SPECIFICATIONS.
2. CONCRETE = 4,000 PSI AT 28 DAYS.
3. ADMIXTURE = CONBLOCK CDA RED.
4. CASTING BY ICAST (JBS 1155 F/C SANITARY).

.

REINFORCING PER ASTM A615 (GRADE 60).
- CONE (As .12)
- RISER/WALLS (As .12)
- FLOOR (As .31) #5 BARS AT 12" C.C.E.W.

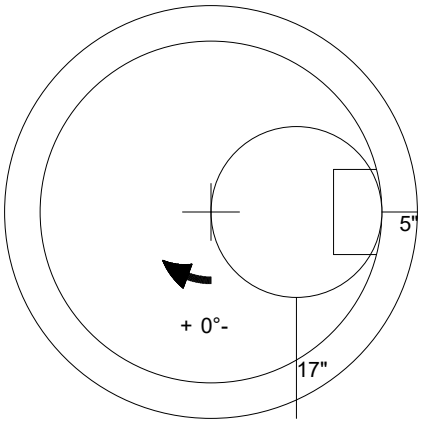

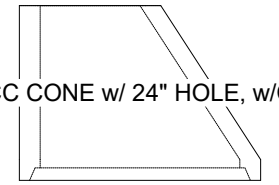

48" - ECC CONE w/ 24" HOLE, w/ConBlock-CDA Red F/G - 42" - (P3)

Coating (Int): Coating (Ext):	Seam Up: Flat Seam Dn: Groove	Wall Thickness: 5"	Height (Ext): 42"	Weight (Net): 3116 lb Volume (Net): 0.8cu.yd