Job Name: 26-3000 - Whispering Cedars at Black Oaks
Job Location: Clarksville, TN 37042
Contractor: Byard Construction, LLC

PC: A. Chambers
TECH: Jared - F
Plant: 100

Structure ID: **A4 SS-MH**

Spec: Sanitary
Type: SAN.MH w/ConBlock-CDA Red
Size: 48"

Rim: 530.42'
Invert: 524.94'
Rim to Invert: 5.48'

Sump: 2"
Floor (Top): 524.773'
Floor Height: 6"

Floor (Bot): 524.273'
Overall Height: 6'
Slack: 1.76"

Structure Notes: .
1. PER ASTM C478 SPECIFICATIONS.
2. CONCRETE = 4,000 PSI AT 28 DAYS.
3. ADMIXTURE = CONBLOCK CDA RED.
4. CASTING BY ICAST (JBS 1155 F/C SANITARY)..
.
REINFORCING PER ASTM A615 (GRADE 60).
- CONE (As .12)
- RISER/WALLS (As .12)
- FLOOR (As .31) #5 BARS AT 12" C.C.E.W.

STRUCTURE SUMMARY:

P3) 24" - CASTING HEIGHT - 6"	0 lb
P2) 48" - ECC CONE w/ 24" HOLE, w/ConBlock-CDA Red - 36"	2251 lb
P1) 48" - MH BASE w/ConBlock-CDA Red - 24"	2938 lb
1) JOINT WRAP - 0.065"x6"x50' CONSEAL CS212	0 lb
1) JOINT WRAP PRIMER - CONSEAL CS-75 (1 gal.)	0 lb
1) 48" - MH INVERT CHANNEL w/ConBlock-CDA Red - FULL HEIGHT	1440 lb
1) ADMIXTURE CONBLOCK CDA RED	0 lb
1) CASTING - JBS 1155 F/C SANITARY	250 lb
1) 48" - Conseal CS-102 1.00" (Double)	0 lb
1) 24" - Conseal CS-102 1.00" (Double)	0 lb
1) PSX - 12-08 NYLO	8 lb
1) PSX - 8QRS-S NYLO	6 lb
5) MH Step ML-10-TDS-NCR - 10"	0 lb
Structure Total:	6893 lb

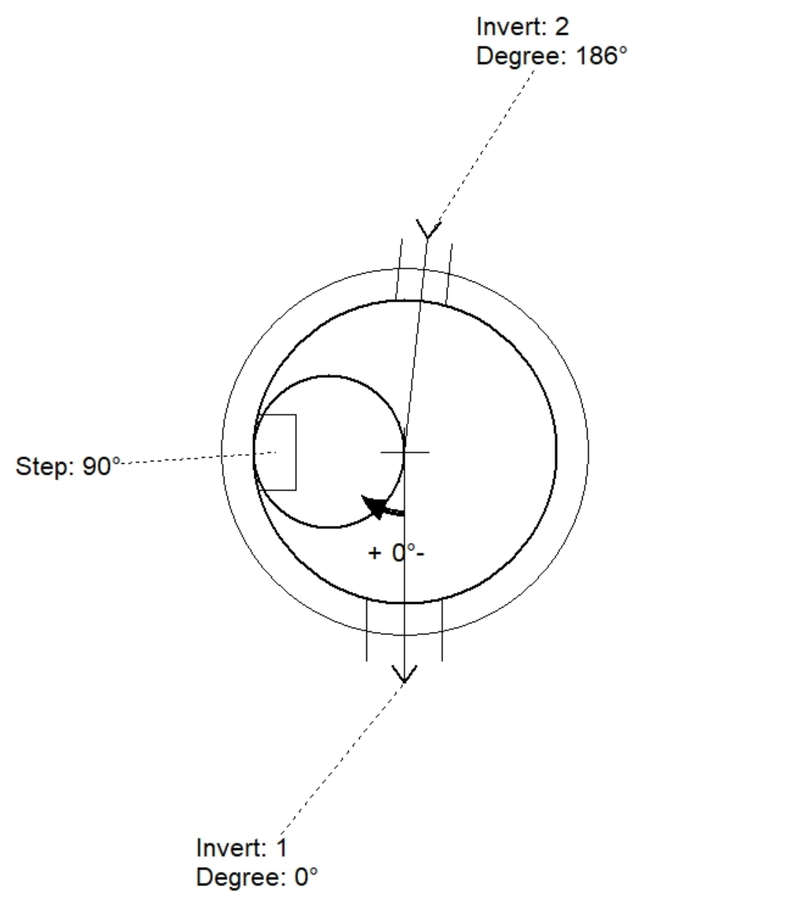

Position	Elev	Angle	Pipe	Pipe OD	Hole	Connector	Up (_)	Ref
Rim	530.42'							
Reducer								
Invert 1	524.94'	0°	8" PVC SDR35	8.5"	12"	PSX 12-08 NYLO	0"	P1
Invert 2	525.14'	186°	4" PVC SDR35	4.25"	8"	PSX 8QRS-S NYLO	2.4"	P1
Invert 3								
Invert 4								
Invert 5								
Invert 6								
Invert 7								
Invert 8								

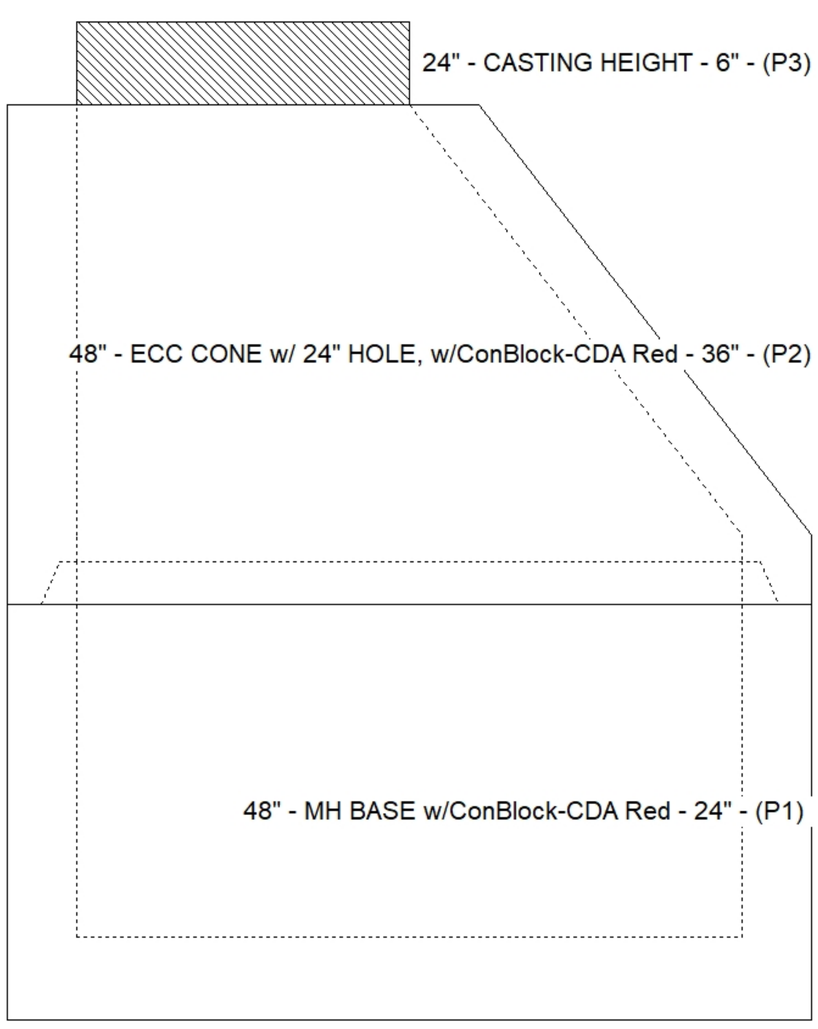

Default - Interior Dimensions

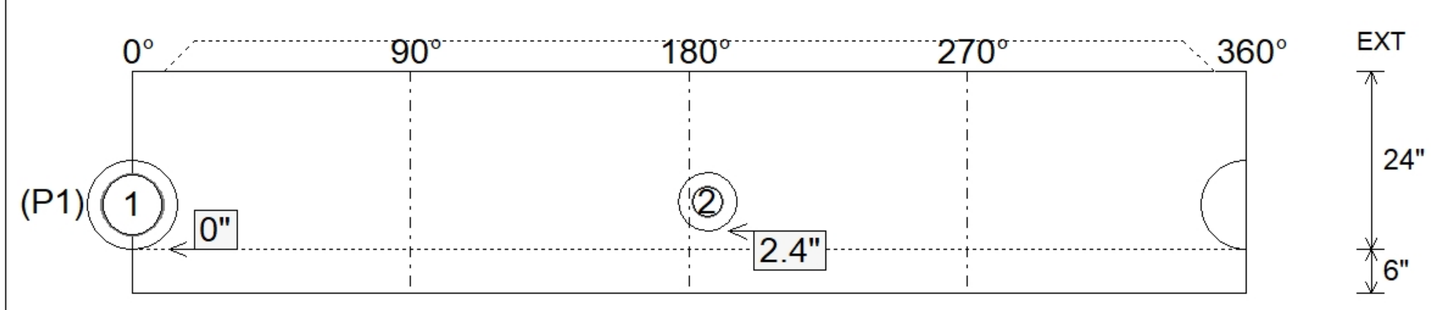

Submittal Drawing
9/24/2026 2:15:45 PM

SUBMITTAL
APPROVED BY: