| | | | |
|---|---|---|---|
| Job Name: 26-2809 - Yorkshire Estates Ph 1-4<br>Job Location: Mt. Juliet, TN<br>Contractor: Harakas | Plant: Beaver Dam<br>10/7/2026 11:04:46 AM | Tech: J. Coppage<br>PC: E. Bradley | |

## Structure ID: MH-H3 SS-MH

**P1 MH048BA24CDARED MH BASE w/ConBlock-CDA Red**

| | |
|---|---|
| P5) 24" - CASTING HEIGHT - 6" | 0 lb |
| P4) 24" - GRADE RING w/ConBlock-CDA Red - 4" | 270 lb |
| P3) 48" - CON CONE w/24" HOLE, w/ConBlock-CDA Red - 24" | 1297 lb |
| P2) 48" - MH RISER w/ConBlock-CDA Red - 36" | 2515 lb |
| P1) 48" - MH BASE w/ConBlock-CDA Red - 24" | 2959 lb |
| 1) JOINT WRAP - 0.065"x6"x50' CONSEAL CS212 | 0 lb |
| 1) JOINT WRAP PRIMER - CONSEAL CS-75 (1 gal.) | 0 lb |
| 1) 48" - MH INVERT CHANNEL w/ConBlock-CDA Red - FULL HEIGHT | 1440 lb |
| 1) CASTING - JBS 1155 F/C SANITARY | 250 lb |
| 2) 48" - Conseal CS-102 1.00" (Double) | 0 lb |
| 2) 24" - Conseal CS-102 1.00" (Double) | 0 lb |
| 1) PSX - 12-08 NYLO | 8 lb |
| 7) MH Step ML-10-TDS-NCR - 10" | 0 lb |
| Structure Total: | 8739 lb |

Rim: 554.9' Rim to Invert: 7.67' Slack: 0.04" Sump: 2" Step Position: 180°

Structure Notes: .
1. JBS 1155 SANITARY PROVIDED BY ICAST.
2. PER ASTM C478 SPECIFICATIONS.
3. CONCRETE = 4,000 PSI AT 28 DAYS.
4. ADMIXTURE = CONBLOCK CDA RED.
5. REINFORCING PER ASTM A615 (GRADE 60).
- CONE (As .12)
- RISER/WALLS (As .12)
- FLOOR (As .31) #5 BARS AT 12" C.C.E.W.

| Position | Elev | Angle | Ext. (cw) | Pipe | Pipe OD | Connector | Hole | Horz Size | Up (_) | Offset |
|---|---|---|---|---|---|---|---|---|---|---|
| Invert 1 | 547.23' | 0° | 0" | 8" PVC SDR26 | 8.5" | PSX 12-08 NYLO | 12" | 12.129" | 0" | 0" |
| Invert 2 | | | | | | | | | | |
| Invert 3 | | | | | | | | | | |
| Invert 4 | | | | | | | | | | |
| Invert 5 | | | | | | | | | | |
| Invert 6 | | | | | | | | | | |
| Invert 7 | | | | | | | | | | |
| Invert 8 | | | | | | | | | | |

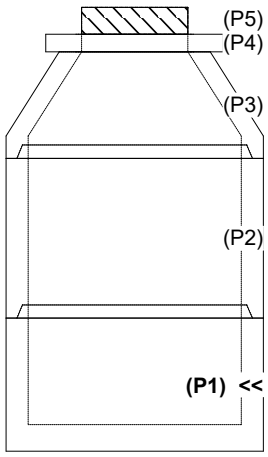


RIGHT-SIDE UP VIEW (int. dimensions)

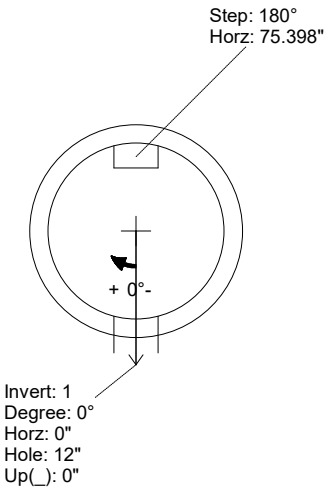


UPSIDE-DOWN VIEW (int. dimenions)

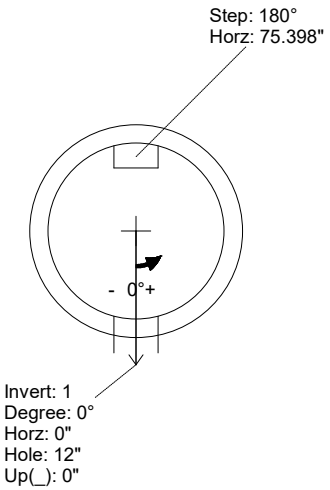


INSIDE WALL DIMENSIONS

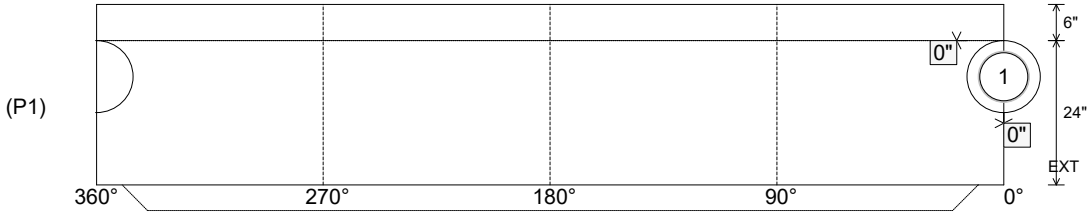


| | | | | |
|---|---|---|---|---|
| Coating (Int):<br>Coating (Ext): | Seam Up: Tongue<br>Seam Dn: n/a | Wall Thickness: 5"<br>Floor Height: 6" | Height (Int): 24"<br>Height (Ext): 30" | Weight (Net): 2959 lb<br>Volume (Net): 0.76cu.yd |

| | | | |
|---|---|---|---|
| Job Name: 26-2809 - Yorkshire Estates Ph 1-4<br>Job Location: Mt. Juliet, TN<br>Contractor: Harakas | Plant: Beaver Dam<br>10/7/2026 11:04:46 AM | Tech: J. Coppage<br>PC: E. Bradley | |

## Structure ID: MH-H3 SS-MH

**P1 MH048BA24CDARED MH BASE w/ConBlock-CDA Red**

| | |
|---|---|
| P5) 24" - CASTING HEIGHT - 6" | 0 lb |
| P4) 24" - GRADE RING w/ConBlock-CDA Red - 4" | 270 lb |
| P3) 48" - CON CONE w/24" HOLE, w/ConBlock-CDA Red - 24" | 1297 lb |
| P2) 48" - MH RISER w/ConBlock-CDA Red - 36" | 2515 lb |
| P1) 48" - MH BASE w/ConBlock-CDA Red - 24" | 2959 lb |
| 1) JOINT WRAP - 0.065"x6"x50' CONSEAL CS212 | 0 lb |
| 1) JOINT WRAP PRIMER - CONSEAL CS-75 (1 gal.) | 0 lb |
| 1) 48" - MH INVERT CHANNEL w/ConBlock-CDA Red - FULL HEIGHT | 1440 lb |
| 1) CASTING - JBS 1155 F/C SANITARY | 250 lb |
| 2) 48" - Conseal CS-102 1.00" (Double) | 0 lb |
| 2) 24" - Conseal CS-102 1.00" (Double) | 0 lb |
| 1) PSX - 12-08 NYLO | 8 lb |
| 7) MH Step ML-10-TDS-NCR - 10" | 0 lb |
| Structure Total: | 8739 lb |

Structure Notes: .
1. JBS 1155 SANITARY PROVIDED BY ICAST.
2. PER ASTM C478 SPECIFICATIONS.
3. CONCRETE = 4,000 PSI AT 28 DAYS.
4. ADMIXTURE = CONBLOCK CDA RED.
5. REINFORCING PER ASTM A615 (GRADE 60).
- CONE (As .12)
- RISER/WALLS (As .12)
- FLOOR (As .31) #5 BARS AT 12" C.C.E.W.

INVERT CHANNEL DRAWING
FULL HEIGHT INVERT

Rim: 554.9' Rim to Invert: 7.67' Slack: 0.04" Sump: 2" Step Position: 180°

| Position | Elev | Angle | Ext. (cw) | Pipe | Pipe OD | Connector | Hole | Horz Size | Up (_) | Offset |
|---|---|---|---|---|---|---|---|---|---|---|
| Invert 1 | 547.23' | 0° | 0" | 8" PVC SDR26 | 8.5" | PSX 12-08 NYLO | 12" | 12.129" | 0" | 0" |
| Invert 2 | | | | | | | | | | |
| Invert 3 | | | | | | | | | | |
| Invert 4 | | | | | | | | | | |
| Invert 5 | | | | | | | | | | |
| Invert 6 | | | | | | | | | | |
| Invert 7 | | | | | | | | | | |
| Invert 8 | | | | | | | | | | |

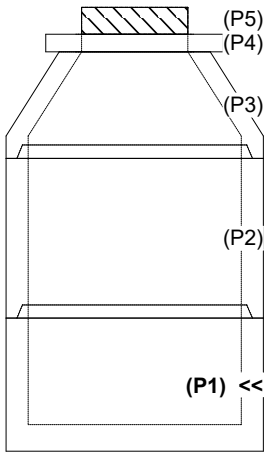


RIGHT-SIDE UP VIEW (int. dimensions)

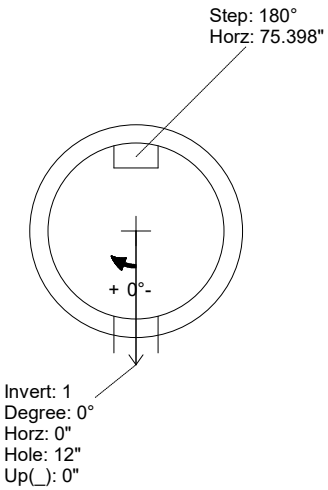


UPSIDE-DOWN VIEW (int. dimenions)

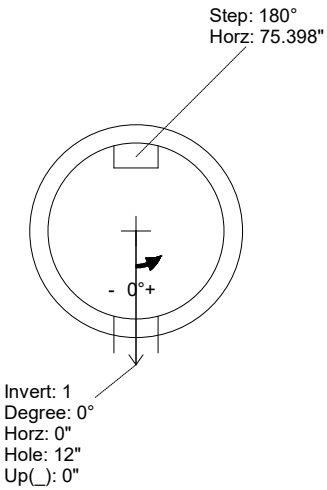


INSIDE WALL DIMENSIONS

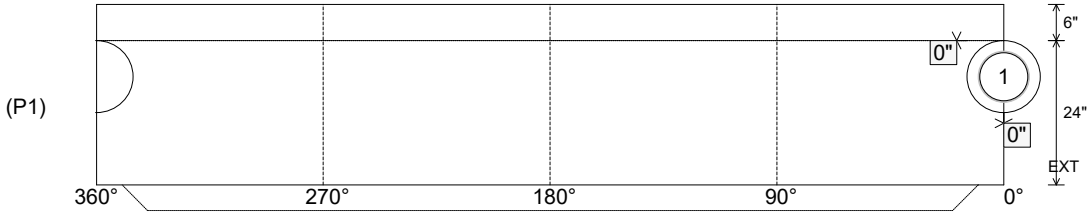


| | | | | |
|---|---|---|---|---|
| Coating (Int):<br>Coating (Ext): | Seam Up: Tongue<br>Seam Dn: n/a | Wall Thickness: 5"<br>Floor Height: 6" | Height (Int): 24"<br>Height (Ext): 30" | Weight (Net): 2959 lb<br>Volume (Net): 0.76cu.yd |