Job Name: 26-2809 - Yorkshire Estates Ph 1-4 Job Location: Mt. Juliet, TN Contractor: Harakas	Plant: Beaver Dam 10/7/2026 11:50:57 AM	Tech: J. Coppage PC: E. Bradley	

Structure ID: MH-D1 SS-MH

P3 MH048CCN24CDARED CON CONE w/24" HOLE, w/ConBlock-CDA Red

P5) 24" - CASTING HEIGHT - 6"	0 lb
P4) 24" - GRADE RING w/ConBlock-CDA Red - 3"	202 lb
P3) 48" - CON CONE w/24" HOLE, w/ConBlock-CDA Red - 24"	1297 lb
P2) 48" - MH RISER w/ConBlock-CDA Red - 36"	2515 lb
P1) 48" - MH BASE w/ConBlock-CDA Red - 24"	2959 lb
1) JOINT WRAP - 0.065"x6"x50' CONSEAL CS212	0 lb
1) JOINT WRAP PRIMER - CONSEAL CS-75 (1 gal.)	0 lb
1) 48" - MH INVERT CHANNEL w/ConBlock-CDA Red - FULL HEIGHT	1440 lb
1) CASTING - JBS 1155 F/C SANITARY	250 lb
2) 48" - Conseal CS-102 1.00" (Double)	0 lb
2) 24" - Conseal CS-102 1.00" (Double)	0 lb
1) PSX - 12-08 NYLO	8 lb
7) MH Step ML-10-TDS-NCR - 10"	0 lb
Structure Total:	8671 lb

Structure Notes: .

1. JBS 1155 SANITARY PROVIDED BY ICAST.
2. PER ASTM C478 SPECIFICATIONS.
3. CONCRETE = 4,000 PSI AT 28 DAYS.
4. ADMIXTURE = CONBLOCK CDA RED.
5. REINFORCING PER ASTM A615 (GRADE 60).

- CONE (As .12)
- RISER/WALLS (As .12)
- FLOOR (As .31) #5 BARS AT 12" C.C.E.W.

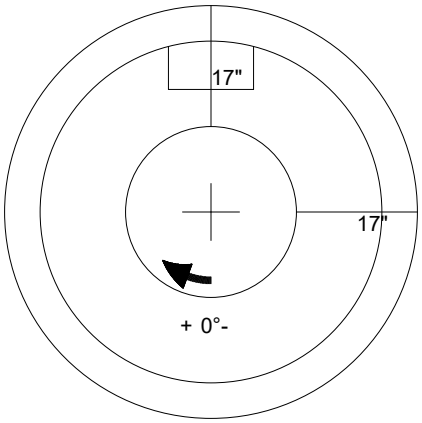

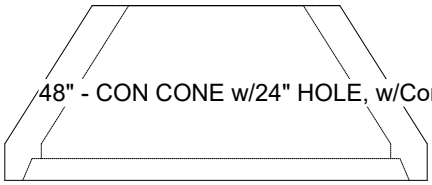

48" - CON CONE w/24" HOLE, w/ConBlock-CDA Red - 24" - (P3)

Coating (Int): Coating (Ext):	Seam Up: Flat Seam Dn: Groove	Wall Thickness: 5"	Height (Ext): 24"	Weight (Net): 1297 lb Volume (Net): 0.33cu.yd