Job Name: 26-2809 - Yorkshire Estates Ph 1-4 Job Location: Mt. Juliet, TN Contractor: Harakas	Plant: Beaver Dam 10/7/2026 11:04:36 AM	Tech: J. Coppage PC: E. Bradley	

Structure ID: MH-B2 SS-MH

P1 MH048BA30CDARED MH BASE w/ConBlock-CDA Red

P4) 24" - CASTING HEIGHT - 6"	0 lb
P3) 48" - CON CONE w/24" HOLE, w/ConBlock-CDA Red - 24"	1297 lb
P2) 48" - MH RISER w/ConBlock-CDA Red - 36"	2515 lb
P1) 48" - MH BASE w/ConBlock-CDA Red - 30"	3330 lb
1) JOINT WRAP - 0.065"x6"x50' CONSEAL CS212	0 lb
1) JOINT WRAP PRIMER - CONSEAL CS-75 (1 gal.)	0 lb
1) 48" - MH INVERT CHANNEL w/ConBlock-CDA Red - FULL HEIGHT	1440 lb
1) CASTING - JBS 1155 F/C SANITARY	250 lb
2) 48" - Conseal CS-102 1.00" (Double)	0 lb
1) 24" - Conseal CS-102 1.00" (Double)	0 lb
2) PSX - 12-08 NYLO	16 lb
7) MH Step ML-10-TDS-NCR - 10"	0 lb
Structure Total:	8848 lb

Structure Notes: .
1. JBS 1155 SANITARY PROVIDED BY ICAST.
2. PER ASTM C478 SPECIFICATIONS.
3. CONCRETE = 4,000 PSI AT 28 DAYS.
4. ADMIXTURE = CONBLOCK CDA RED.
5. REINFORCING PER ASTM A615 (GRADE 60).
- CONE (As .12)
- RISER/WALLS (As .12)
- FLOOR (As .31) #5 BARS AT 12" C.C.E.W.

Rim: 484.6' Rim to Invert: 8.03' Slack: 2.36" Sump: 2" Step Position: 135°

Position	Elev	Angle	Ext. (cw)	Pipe	Pipe OD	Connector	Hole	Horz Size	Up (_)	Offset
Invert 1	476.57'	0°	0"	8" PVC SDR26	8.5"	PSX 12-08 NYLO	12"	12.129"	0"	0"
Invert 2	476.77'	270°	136.659"	8" PVC SDR26	8.5"	PSX 12-08 NYLO	12"	12.129"	2.4"	0"
Invert 3										
Invert 4										
Invert 5										
Invert 6										
Invert 7										
Invert 8										

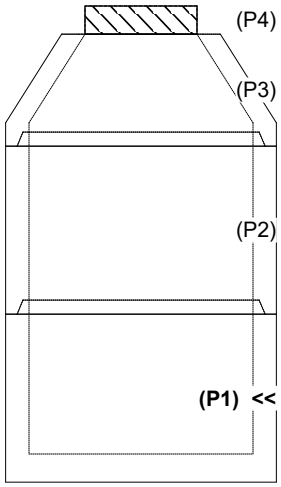

RIGHT-SIDE UP VIEW (int. dimensions)

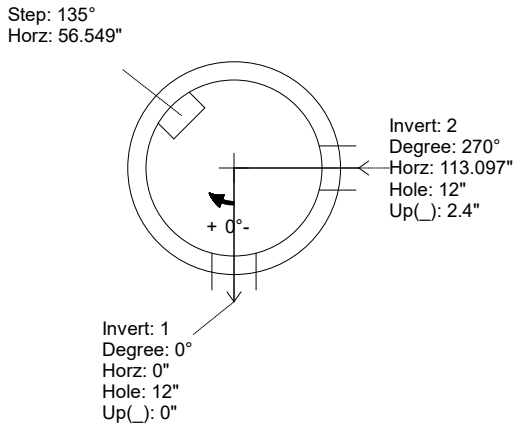

UPSIDE-DOWN VIEW (int. dimenions)

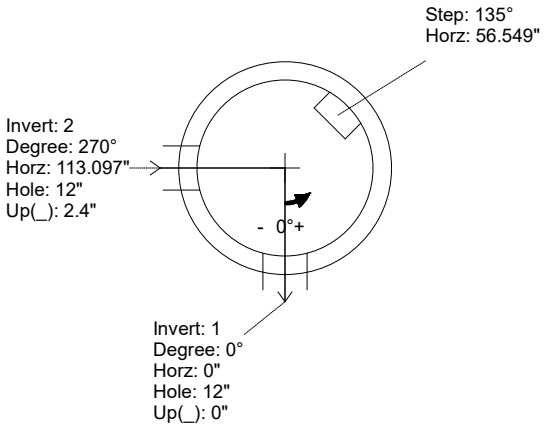

INSIDE WALL DIMENSIONS

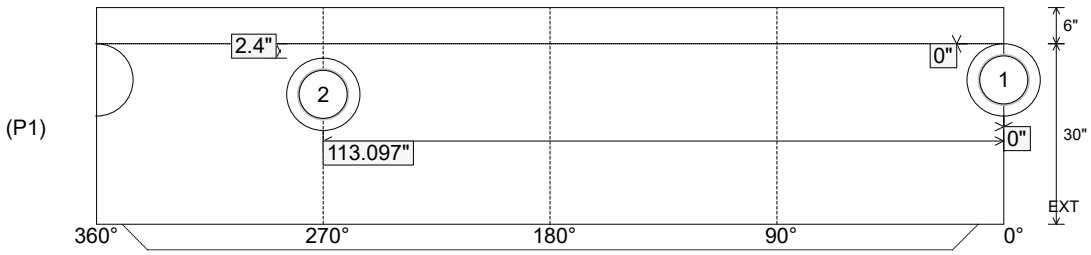

Coating (Int): Coating (Ext):	Seam Up: Tongue Seam Dn: n/a	Wall Thickness: 5" Floor Height: 6"	Height (Int): 30" Height (Ext): 36"	Weight (Net): 3330 lb Volume (Net): 0.85cu.yd

Job Name: 26-2809 - Yorkshire Estates Ph 1-4 Job Location: Mt. Juliet, TN Contractor: Harakas	Plant: Beaver Dam 10/7/2026 11:04:36 AM	Tech: J. Coppage PC: E. Bradley	

Structure ID: MH-B2 SS-MH

P1 MH048BA30CDARED MH BASE w/ConBlock-CDA Red

P4)	24" - CASTING HEIGHT - 6"	0 lb
P3)	48" - CON CONE w/24" HOLE, w/ConBlock-CDA Red - 24"	1297 lb
P2)	48" - MH RISER w/ConBlock-CDA Red - 36"	2515 lb
P1)	48" - MH BASE w/ConBlock-CDA Red - 30"	3330 lb
1)	JOINT WRAP - 0.065"x6"x50' CONSEAL CS212	0 lb
1)	JOINT WRAP PRIMER - CONSEAL CS-75 (1 gal.)	0 lb
1)	48" - MH INVERT CHANNEL w/ConBlock-CDA Red - FULL HEIGHT	1440 lb
1)	CASTING - JBS 1155 F/C SANITARY	250 lb
2)	48" - Conseal CS-102 1.00" (Double)	0 lb
1)	24" - Conseal CS-102 1.00" (Double)	0 lb
2)	PSX - 12-08 NYLO	16 lb
7)	MH Step ML-10-TDS-NCR - 10"	0 lb
	Structure Total:	8848 lb

Rim: 484.6' Rim to Invert: 8.03' Slack: 2.36" Sump: 2" Step Position: 135°

Structure Notes: .
1. JBS 1155 SANITARY PROVIDED BY ICAST.
2. PER ASTM C478 SPECIFICATIONS.
3. CONCRETE = 4,000 PSI AT 28 DAYS.
4. ADMIXTURE = CONBLOCK CDA RED.
5. REINFORCING PER ASTM A615 (GRADE 60).
- CONE (As .12)
- RISER/WALLS (As .12)
- FLOOR (As .31) #5 BARS AT 12" C.C.E.W.

INVERT CHANNEL DRAWING
FULL HEIGHT INVERT

Position	Elev	Angle	Ext. (cw)	Pipe	Pipe OD	Connector	Hole	Horz Size	Up (_)	Offset
Invert 1	476.57'	0°	0"	8" PVC SDR26	8.5"	PSX 12-08 NYLO	12"	12.129"	0"	0"
Invert 2	476.77'	270°	136.659"	8" PVC SDR26	8.5"	PSX 12-08 NYLO	12"	12.129"	2.4"	0"
Invert 3										
Invert 4										
Invert 5										
Invert 6										
Invert 7										
Invert 8										

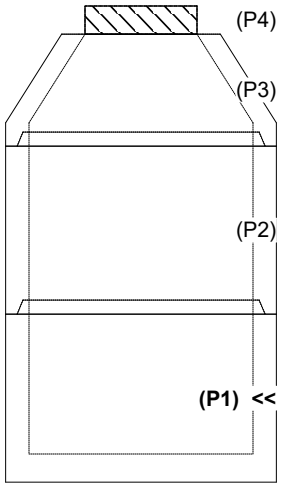

RIGHT-SIDE UP VIEW (int. dimensions)

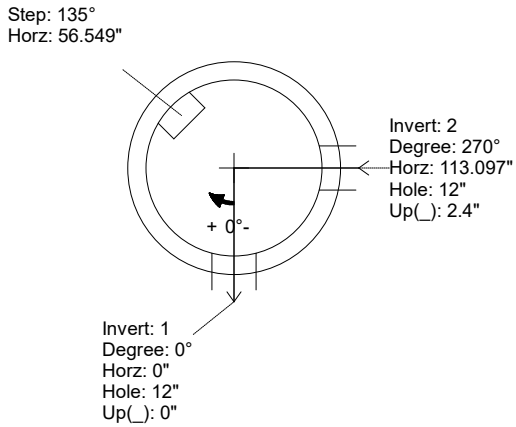

UPSIDE-DOWN VIEW (int. dimenions)

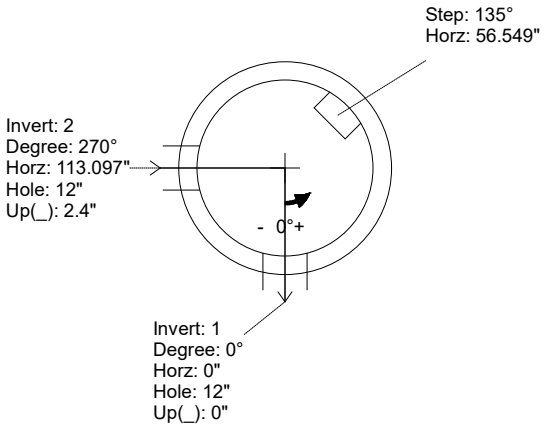

INSIDE WALL DIMENSIONS

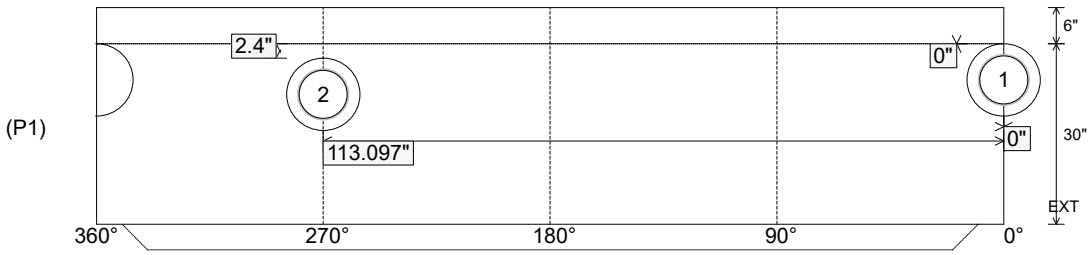

Coating (Int): Coating (Ext):	Seam Up: Tongue Seam Dn: n/a	Wall Thickness: 5" Floor Height: 6"	Height (Int): 30" Height (Ext): 36"	Weight (Net): 3330 lb Volume (Net): 0.85cu.yd