Job Name: 26-2783 - Kentucky Livestock Innovation Center Job Location: Versailles, KY Contractor: Lagco Inc.	Plant: Beaver Dam 10/13/2026 12:57:24 PM	Tech: J. Coppage PC: M. Sullivan	

Structure ID: CI-6A

P1 MH048BA72 MH BASE

P3) 24" x 36" - CASTING HEIGHT - 6"	0 lb
P2) 48" - MH FLAT TOP w/24"x36" Hole - 7"	1044 lb
P1) 48" - MH BASE - 72"	5835 lb
1) CASTING - HOE 525 LV SET (F/G/H)	442 lb
1) 48" - Conseal CS-102 1.00"	0 lb
1) 24" x 36" - Conseal CS-102 1.00"	0 lb
1) Hole - 30	0 lb
1) Hole - 24	0 lb
1) Hole - 6	0 lb
6) MH Step ML-10-TDS-NCR - 10"	0 lb
Structure Total:	7321 lb

Structure Notes: .
1. JR HOE HOE-525 LV SET PROVIDED BY ICAST
2. PER LEFUCG CBI TYPE D/ ASTM C478 SPEC'S.
3. CONCRETE = 4,000 PSI AT 28 DAYS.
4. REINFORCING PER ASTM A615 (grade 60).
- TOP SLAB (As .62) #5 BARS AT 6" C.C.E.W.
- WALLS (As .12)
- FLOOR (As .31) #5 BARS AT 12" C.C.E.W.

Rim: 852.3' Rim to Invert: 7.11' Slack: 2.22" Sump: 1.9" Step Position: 270°

Position	Elev	Angle	Ext. (cw)	Pipe	Pipe OD	Connector	Hole	Horz Size	Up (_)	Offset
Invert 1	845.19'	0°	0"	24" HDPE	27.8"	Hole 30	30"	32.406"	0"	0"
Invert 2	845.29'	140°	70.86"	18" HDPE	21.2"	Hole 24	24"	25.133"	1.5"	0"
Invert 3	850.2'	180°	91.106"	4" HDPE (perf pipe)	4.8"	Hole 6	6"	6.016"	61.62"	0"
Invert 4										
Invert 5										
Invert 6										
Invert 7										
Invert 8										

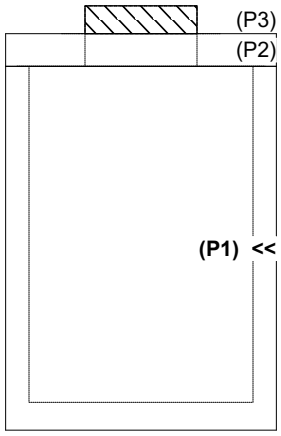

RIGHT-SIDE UP VIEW (int. dimensions)

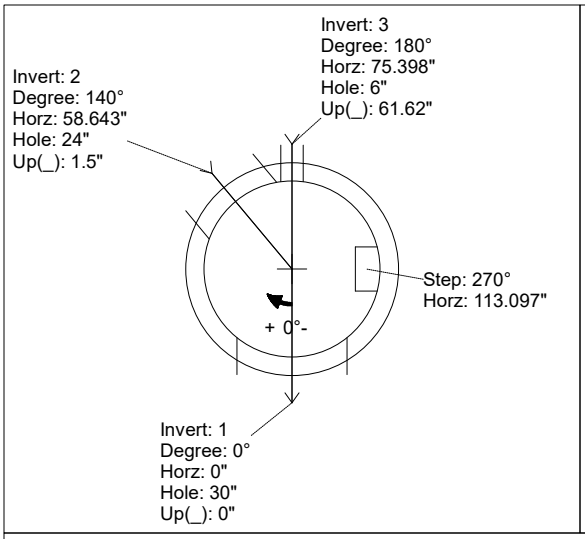

UPSIDE-DOWN VIEW (int. dimenions)

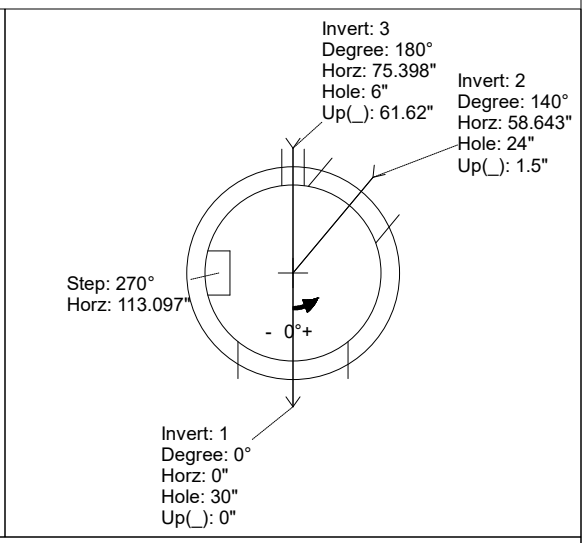

INSIDE WALL DIMENSIONS

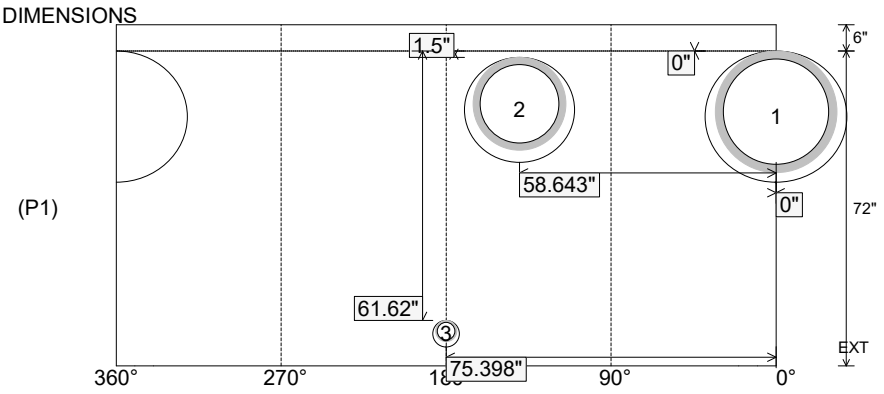

Coating (Int): Coating (Ext):	Seam Up: Flat Seam Dn: n/a	Wall Thickness: 5" Floor Height: 6"	Height (Int): 72" Height (Ext): 78"	Weight (Net): 5835 lb Volume (Net): 1.49cu.yd