Job Name: 26-2756 - Lofts at Cadiz
Job Location: Cadiz, KY 42241
Contractor: BTM Excavating, LLC

PC: T. Lewis
TECH: Jared - F
Plant: 100

Structure ID: **SSMH-B SS-MH**

Spec: Sanitary	Rim: 474.2'	Sump: 2"	Floor (Bot): 467.493'
Type: SAN.MH	Invert: 468.16'	Floor (Top): 467.993'	Overall Height: 6.583'
Size: 48"	Rim to Invert: 6.04'	Floor Height: 6"	Slack: 1.48"

Structure Notes: .
1. PER ASTM C478 SPECIFICATIONS.
2. CONCRETE = 4,000 PSI AT 28 DAYS.
3. CASTING BY ICAST (HOE MC-315 F/C SANITARY).
.
REINFORCING PER ASTM A615 (GRADE 60).
- CONE (As .12)
- RISER/WALLS (As .12)
- FLOOR (As .31) #4 BARS AT 12" C.C.E.W.

STRUCTURE SUMMARY:

P3) 24" - CASTING HEIGHT - 7"	0 lb
P2) 48" - ECC CONE w/ 24" HOLE - 42"	3200 lb
P1) 48" - MH BASE - 24"	2911 lb
1) JOINT WRAP - 0.065"x6"x50' CONSEAL CS212	0 lb
1) JOINT WRAP PRIMER - CONSEAL CS-75 (1 gal.)	0 lb
1) 48" - MH INVERT CHANNEL - FULL HEIGHT	1440 lb
1) CASTING - HOE MC-315 F/C Sanitary	258 lb
1) 48" - Conseal CS-102 1.00" (Double)	0 lb
1) 24" - Conseal CS-102 1.00" (Double)	0 lb
2) PSX - 12-08 NYLO	16 lb
5) MH Step ML-10-TDS-NCR - 10"	0 lb
Structure Total:	7825 lb

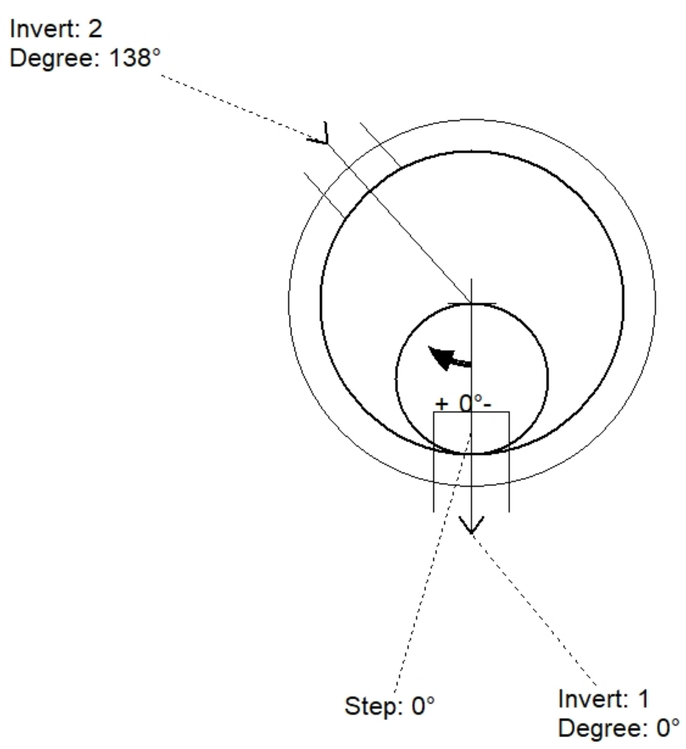

Position	Elev	Angle	Pipe	Pipe OD	Hole	Connector	Up (_)	Ref
Rim	474.2'							
Reducer								
Invert 1	468.16'	0°	8" PVC SDR35	8.5"	12"	PSX 12-08 NYLO	0"	P1
Invert 2	468.26'	138°	8" PVC SDR35	8.5"	12"	PSX 12-08 NYLO	1.2"	P1
Invert 3								
Invert 4								
Invert 5								
Invert 6								
Invert 7								
Invert 8								

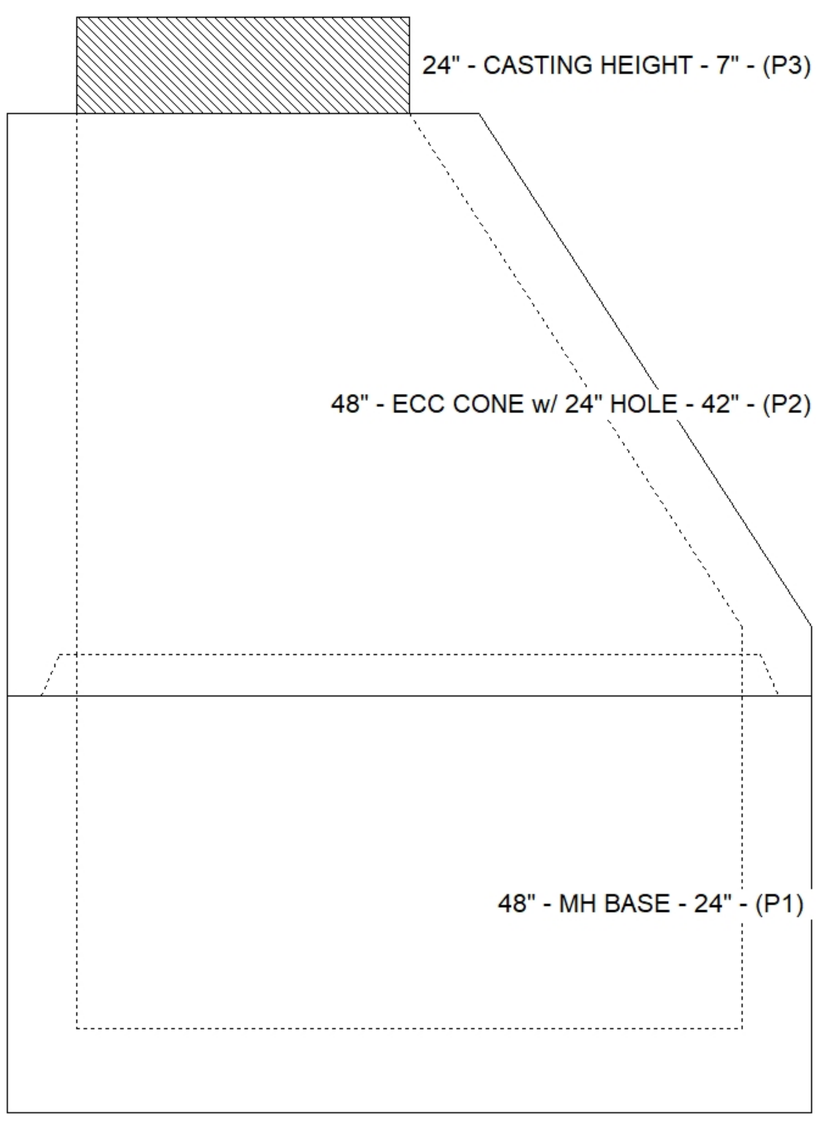

Default - Interior Dimensions

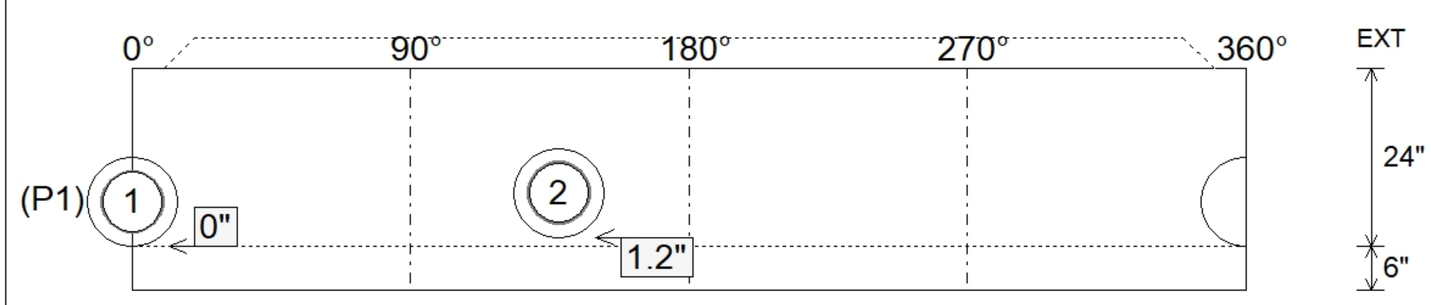

Submittal Drawing
9/18/2026 8:35:26 AM

SUBMITTAL
APPROVED BY: