Job Name: 26-2744 904618 Jeffersonville HS
Job Location: Jeffersonville, IN
Contractor: Contech Engineering Solutions

PC: C. Goff
TECH: S. Felletter
Plant:

Structure ID: **10-CS-6**

Spec: Storm-Pipe Centered	Rim: 483'	Sump: 70.116"	Floor (Bot): 470.35'
Type: STM.MH	Invert: 476.86'	Floor (Top): 471.017'	Overall Height: 12.25'
Size: 72"	Rim to Invert: 6.14'	Floor Height: 8"	Slack: 4.796"

Structure Notes: .
4" CASTING BY OTHERS
.
LIFTING ANCHORS TO BE INSTALLED
ON THE OUTSIDE OF THE STRUCTURE
.
ICAST TO INSTALL THE INTERNALS
.
CONTECH'S LOGO AS WELL AS THE
INLET AND OUTLET MUST BE
STENCILED ONTO THE STRUCTURE

STRUCTURE SUMMARY:

P5) 30" - CASTING HEIGHT - 4"	0 lb
P4) 72" - MH FLAT TOP SPEC. (30" ECC HOLE) F/G - 15"	4661 lb
P3) 72" - MH RISER T/G - 12"	1749 lb
P2) 72" - MH RISER T/G - 84"	11003 lb
P1) 72" - MH BASE T/n - 24"	7398 lb
1) ASSEMBLY REQUIRED	0 lb
1) CVSTENCILING	0 lb
3) 72" - Conseal CS-102 1.00"	0 lb
2) Hole - 36	0 lb
Structure Total:	24811 lb

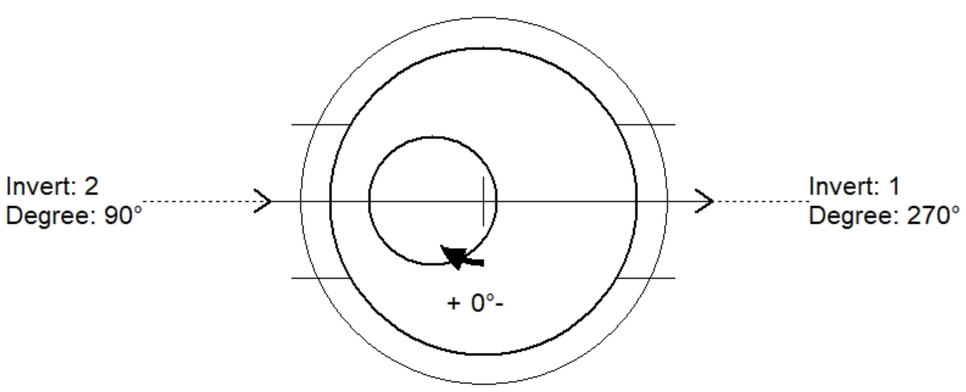

Position	Elev	Angle	Pipe	Pipe OD	Hole	Connector	Up (_)	Ref
Rim	483'							
Reducer								
Invert 1	476.86'	270°	24" RCP B WALL	30"	36"	Hole 36	35.116"	P2
Invert 2	476.86'	90°	24" RCP B WALL	30"	36"	Hole 36	35.116"	P2
Invert 3								
Invert 4								
Invert 5								
Invert 6								
Invert 7								
Invert 8								

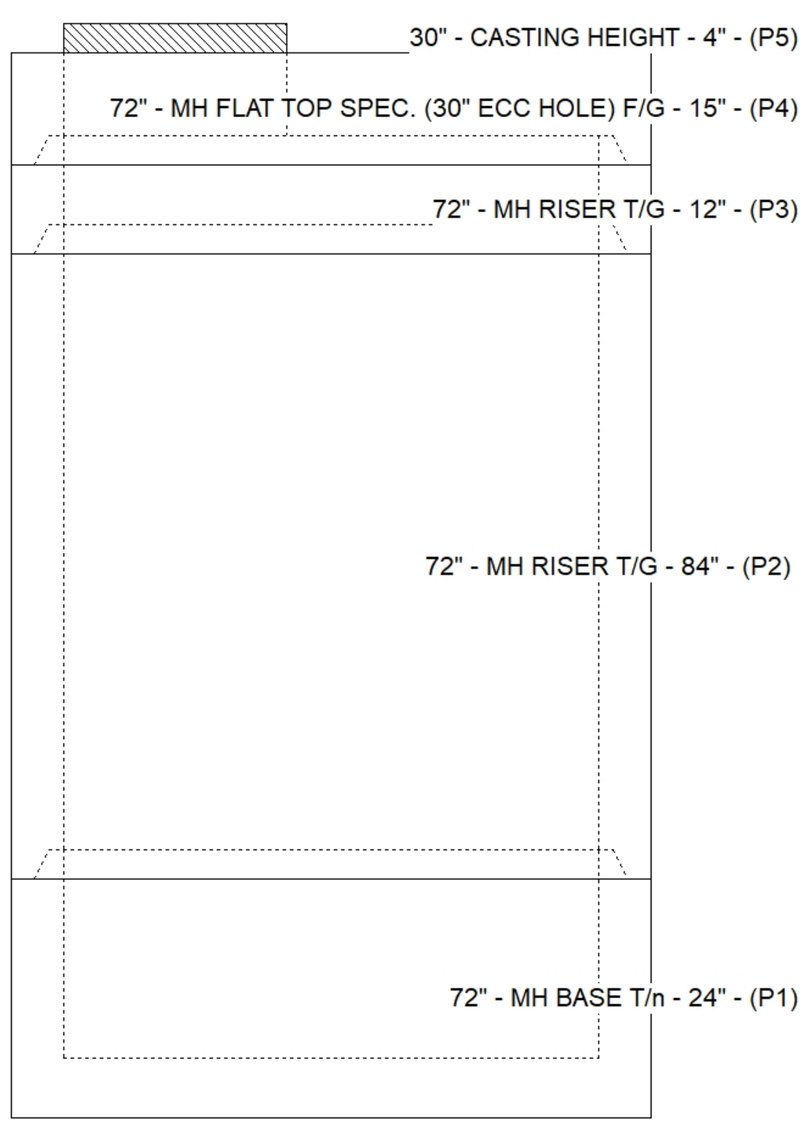

Default - Interior Dimensions

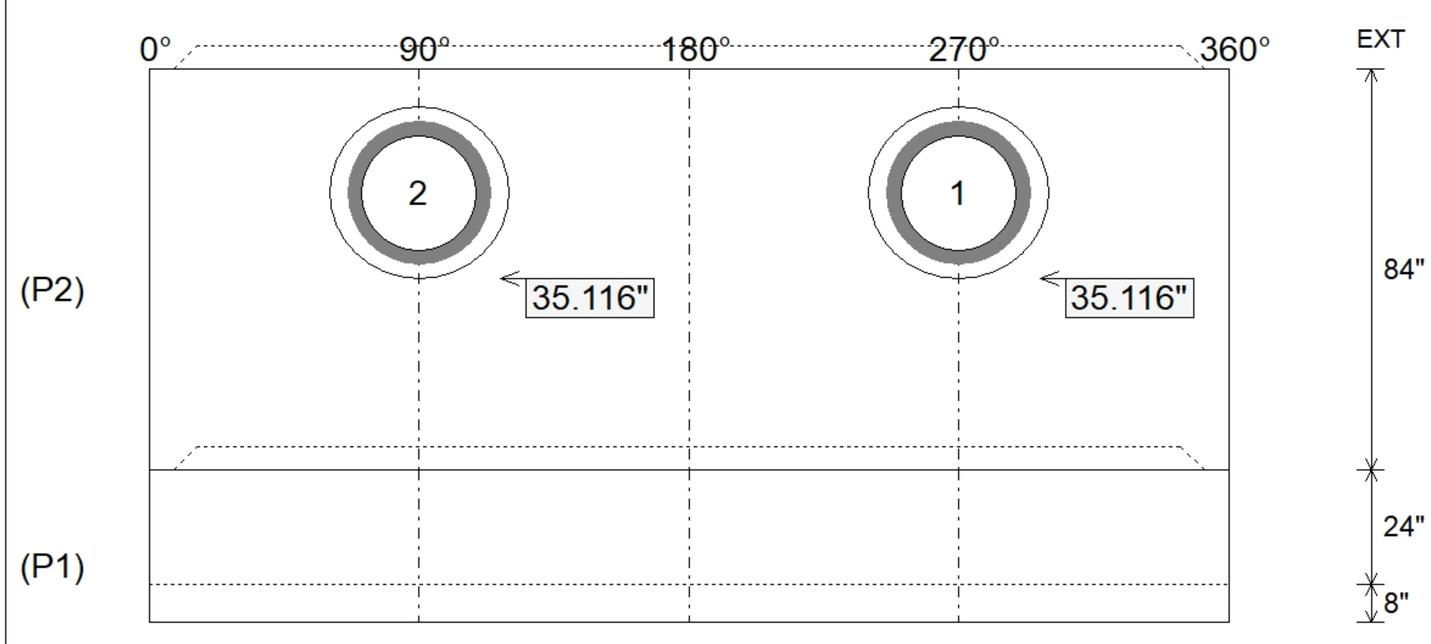

Submittal Drawing
6/24/2026 2:29:39 PM

SUBMITTAL
APPROVED BY: