26-2731 870553 Hampton Inn O'Fallon

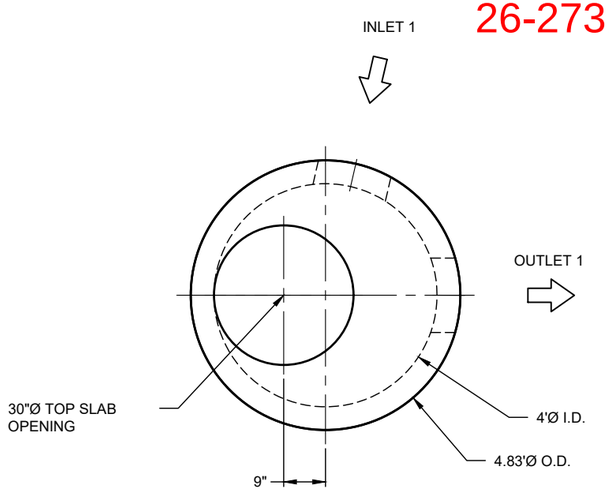

PLAN VIEW

INTERNALS NOT SHOWN

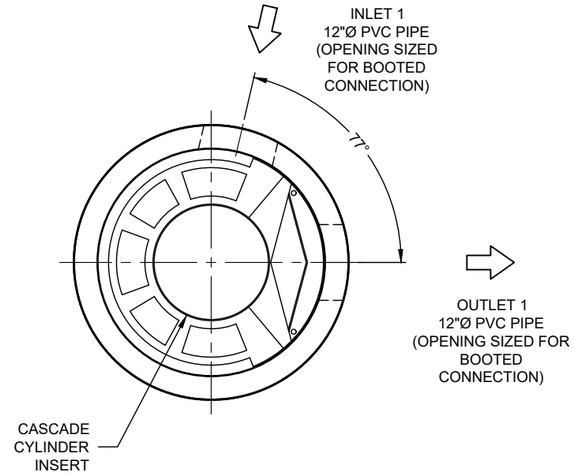

PLAN VIEW FOR PIPE ORIENTATION

TOP SLAB NOT SHOWN

MATERIAL LIST

COUNT	DESCRIPTION	PART NUMBER	PROVIDED BY	INSTALLED BY
1	CS-4 CYLINDER INSERT, STD.	325-003949	CONTECH	PRECASTER
4	CS-4 ALUMINUM INSTALLATION BRACKETS	325-003956	CONTECH	PRECASTER
1	CS-4 HARDWARE KIT	325-003955	CONTECH	PRECASTER
2	BOOT FOR 12"Ø SDR PIPE		PRECASTER	PRECASTER
1	SEALANT FOR JOINTS		PRECASTER	CONTRACTOR
1	30"Ø X 4" FRAME AND COVER, EJ #41600483, OR EQUIV.	325-000332	CONTECH	CONTRACTOR

10-CS-4

ICAST to fully pre-assemble internal materials prior to shipment

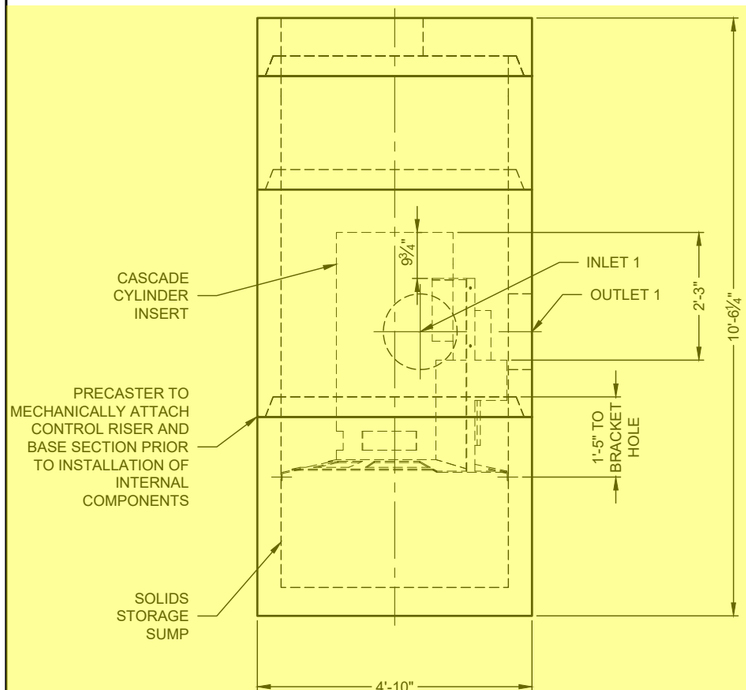

ELEVATION VIEW

SEE INSTALLATION NOTE A

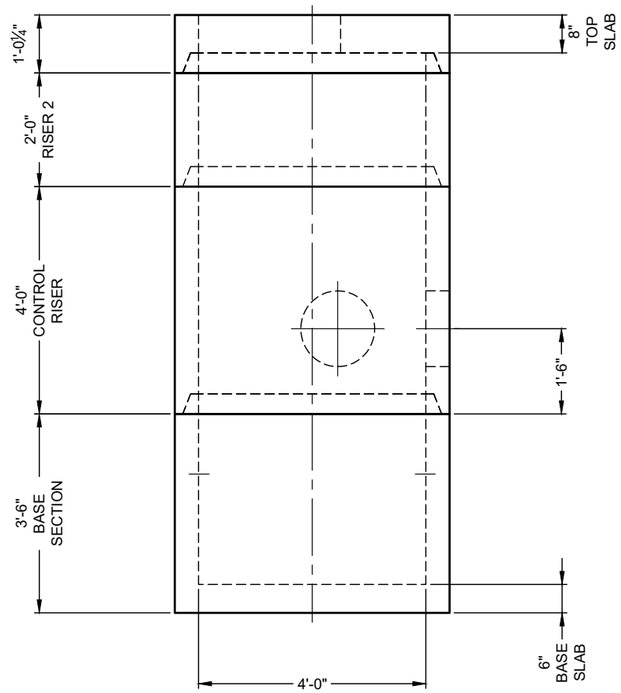

PRECAST COMPONENTS

INTERNALS NOT SHOWN

GENERAL NOTES
1. DESIGN LOADING - AASHTO HS-20
2. ALL PRECAST CONCRETE MANUFACTURED PARTS SHALL CONFORM TO ASTM C-478, WITH MINIMUM CONCRETE STRENGTH OF 4000 PSI AT 28 DAYS
3. JOINT SEALANT SHALL CONFORM TO ASTM C-990 OR ASTM C-443
4. GROUND WATER ELEVATION ASSUMED AT OUTLET INVERT
5. MANUFACTURING TOLERANCE = +/- 1/2-INCH
6. SOME HIDDEN LINES MAY BE OMITTED FOR CLARITY

INSTALLATION NOTES
A. PRECASTER TO SHIP ACCESS CASTINGS WITH STRUCTURE
B. REFER TO CONTECH ASSEMBLY INSTRUCTIONS FOR ADDITIONAL INFORMATION.
C. PRECASTER TO INSTALL INTERNAL COMPONENTS PRIOR TO SHIPPING UNLESS INSTRUCTED OTHERWISE BY CONTECH
D. PIPE OPENINGS SHALL BE STENCILED "INLET" OR "OUTLET" AS APPROPRIATE
E. APPLYING ALIGNMENT MARKS ON ALL PIECES OF MULTIPLE PIECE ASSEMBLIES IS ENCOURAGED
F. IF STRUCTURE IS DELIVERED IN MULTIPLE SECTIONS, EACH PIECE SHALL BE LABELED WITH THE CONTECH PROJECT NUMBER, SEQUENCE NUMBER AND SITE DESIGNATION

SITE INFORMATION
RIM ELEV. = 570.5+/-
TOP OF STRUCTURE = 569.61
INLET PIPE 1 INVERT ELEV. = 563.59
INLET PIPE 1 DIAMETER AND MATERIAL = 12"Ø PVC
OUTLET PIPE INVERT ELEV. = 563.59
OUTLET PIPE DIAMETER AND MATERIAL = 12"Ø PVC
OUTSIDE BOTTOM OF STRUCTURE ELEV. = 559.09

STRUCTURE WEIGHT
APPROXIMATE HEAVIEST PICK = 8000 LBS.
STRUCTURE IS DELIVERED IN 3 PIECES

TOP SLAB = 2000 LBS.
RISER 2 = 2000 LBS. LBS.
CONTROL RISER = MECHANICALLY ATTACHED TO BASE SECTION
BASE SECTION = 8000 LBS.

ICAST
5888 / 757440
LAYOUT 1A
5.33TS

CONTECH
FABRICATION
DRAWING

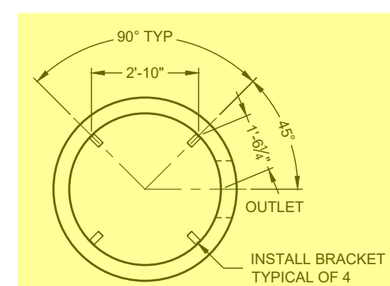

SUPPORT BRACKET LAYOUT PLAN VIEW

The design and information shown on this drawing is provided as a service to the owner, engineer and/or contractor by CONTECH Construction Products Inc. or one of its affiliated companies ("CONTECH"). Neither this drawing nor any part thereof may be used, reproduced or modified in any manner without the prior written consent of CONTECH. Failure to comply is done at the user's own risk and CONTECH expressly disclaims any liability or responsibility for such use.

If discrepancies between the supplied information upon which the drawing is based and actual field conditions are encountered as site work progresses, these discrepancies must be reported to CONTECH immediately for re-evaluation of the design. CONTECH accepts no liability for designs based on missing, incomplete or inaccurate information supplied by others.

MARK	DATE	REVISION DESCRIPTION	BY

CS-4 - 870553-10
HAMPTON INN O'FALLON
OFALLON, MO
SITE DESIGNATION: HDS UNIT

CONTECH ENGINEERED SOLUTIONS LLC
A QUIKRETE COMPANY
9100 Centre Pointe Dr., Suite 400, West Chester, OH 45069
800-338-1122 513-645-7000 513-645-7993 FAX
CASCADE separator®
FOR PATENT INFORMATION, GO TO www.ContechES.com/IP

DATE: 1/2/2026	
DESIGNED: LJK	DRAWN: CRW
CHECKED: MSB	APPROVED: LJK
PROJECT No.: 870553	SEQUENCE No.: 10
SHEET: 1 OF 1	

C:\USERS\CIERRA.WHEELER\ONEDRIVE - THE QUIKRETE COMPANIES\DYNAMICS365 - CONTECH - PROJECTS\870553\PRODUCTS\870553-10-CASCADE\DRAWINGS\870553-10-CS-4 CONFAB.DWG 6/5/2026 8:57 AM

26-2731 870553 Hampton Inn O'Fallon

1810B4 V1600-4 Assembly

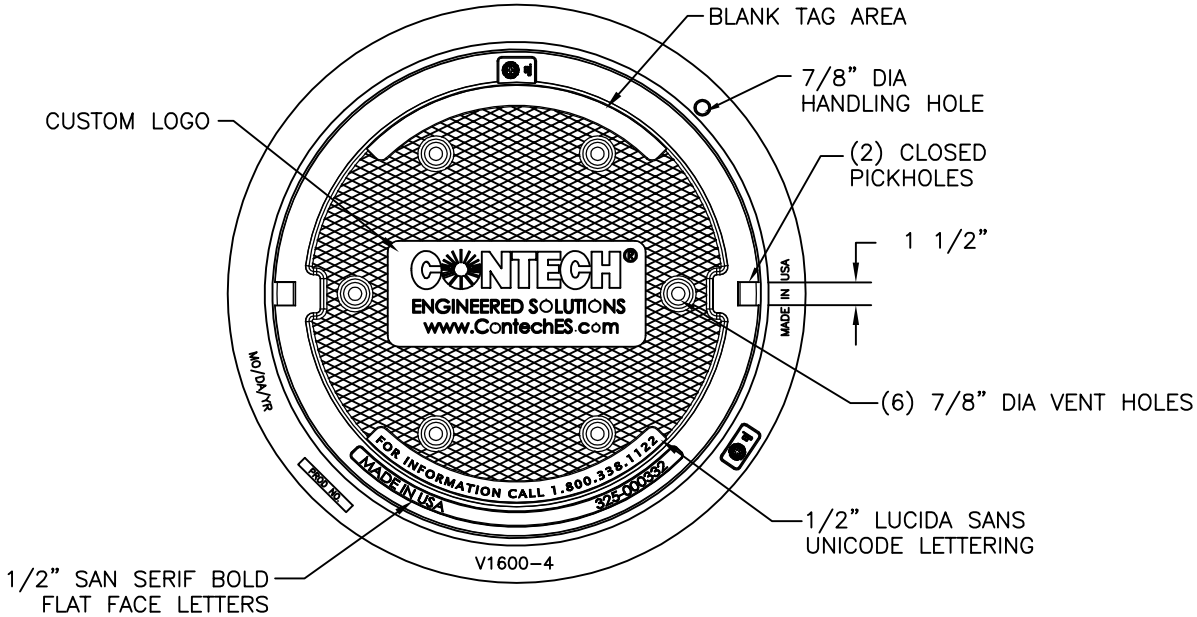

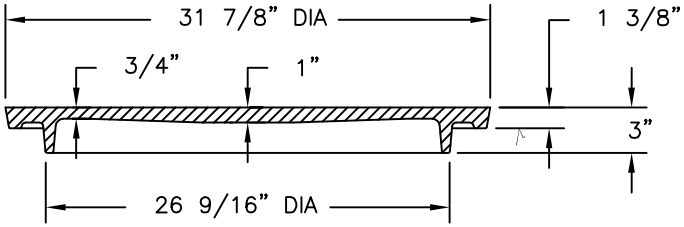

COVER SECTION

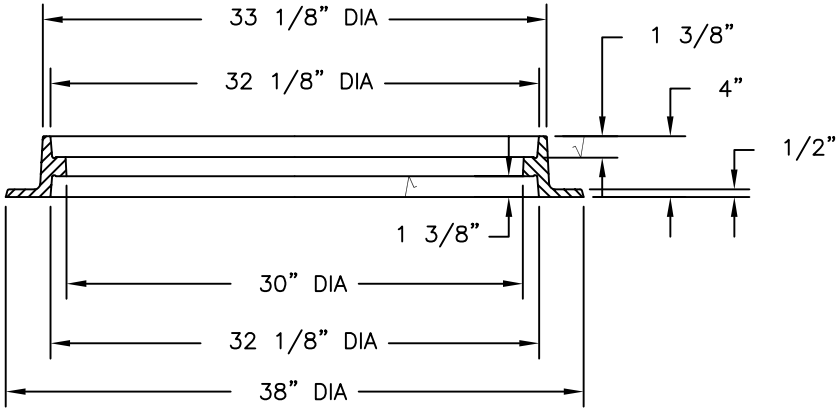

FRAME SECTION

Product Number

41600483

Design Features

-Materials
Cover
Gray Iron (CL35B)
Frame
Gray Iron (CL35B)

-Design Load
Heavy Duty
-Open Area
n/a
-Coating
Undipped
-√ Designates Machined Surface

Certification

-
-ASTM A48
-
-Country of Origin: USA

Major Components

00180783
41600410

Drawing Revision

05/09/2007 Designer: SMH
6/26/2017 Revised By: DAE

Disclaimer

Weights (lbs./kg) dimensions (inches/mm) and drawings provided for your guidance. We reserve the right to modify specifications without prior notice.

CONFIDENTIAL: This drawing is the property of EJ GROUP, Inc., and embodies confidential information, registered marks, patents, trade secret information, and/or know how that is the property of EJ GROUP, Inc. Copyright © 2012 EJ GROUP, Inc. All rights reserved.

Contact

800 626 4653
ejco.com

26-2731 870553 Hampton Inn O'Fallon

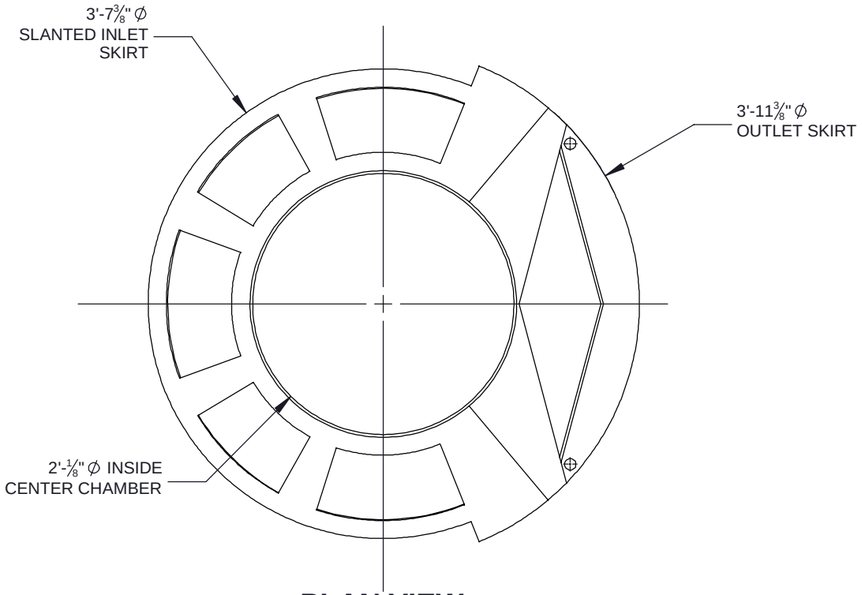

PLAN VIEW

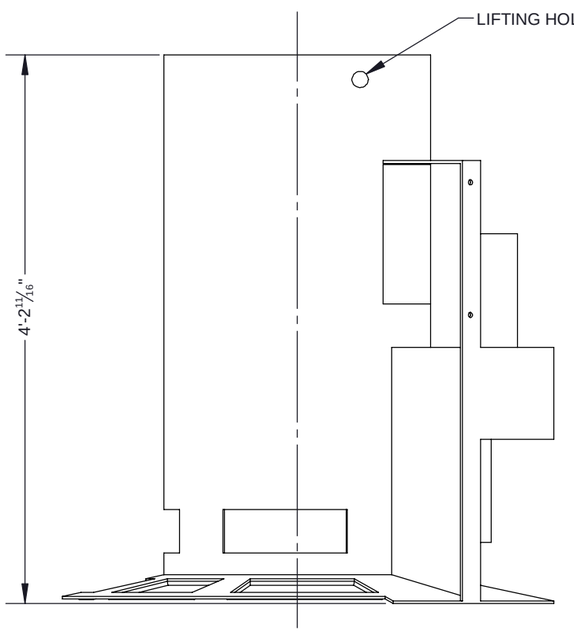

ELEVATION VIEW

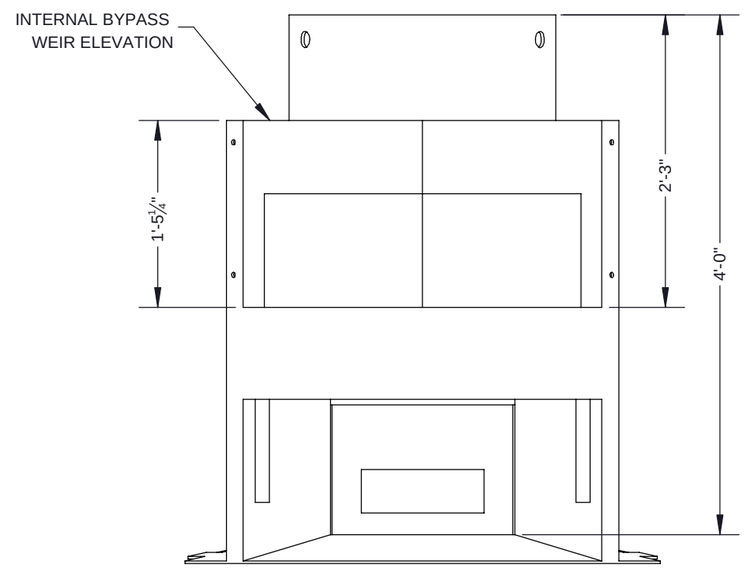

ELEVATION VIEW: OUTLET SIDE

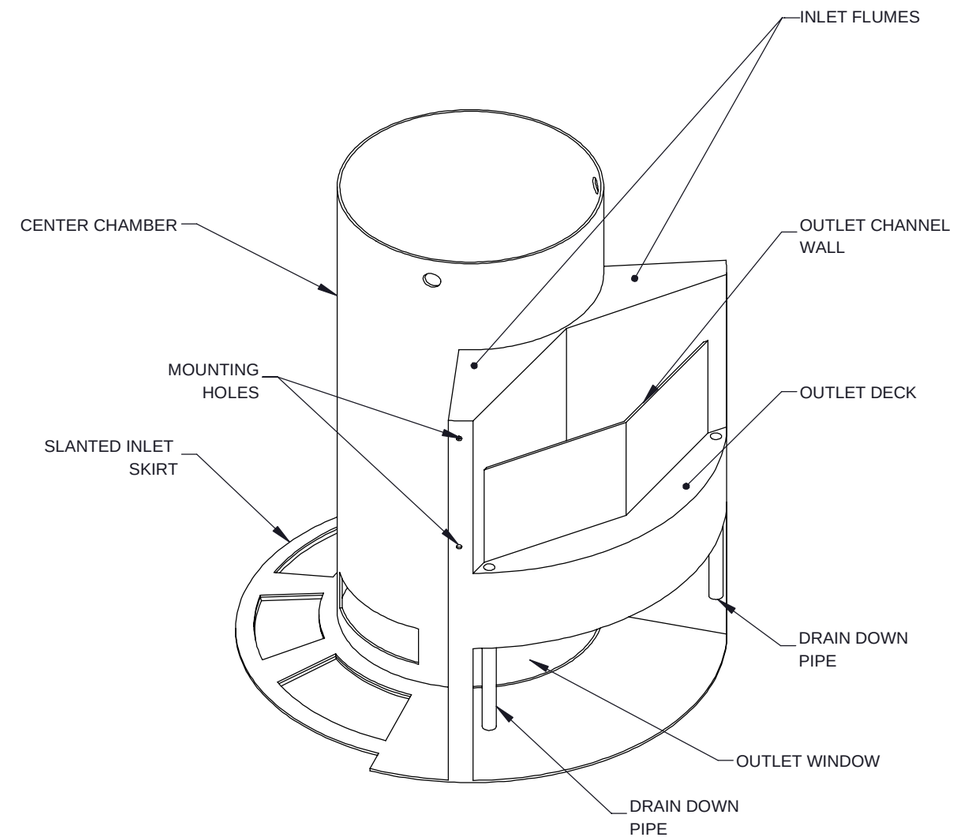

ISOMETRIC VIEW

NOTES:
1. SEE CASCADE SEPARATOR INSTALLATION GUIDE FOR ADDITIONAL INFORMATION

The design and information shown on this drawing is provided as a service to the project owner, engineer and contractor by Contech Engineered Solutions LLC, or one of its affiliated companies ("Contech"). Neither this drawing, nor any part thereof, may be used, reproduced or modified in any manner without the prior written consent of Contech. Failure to comply is done at the user's own risk and Contech expressly disclaims any liability or responsibility for such use.

If discrepancies between the supplied information upon which the drawing is based and actual field conditions are encountered as site work progresses, these discrepancies must be reported to Contech immediately for re-evaluation of the design. Contech accepts no liability for designs based on missing, incomplete or inaccurate information supplied by others.

CASCADE separator™

CONTECH® ENGINEERED SOLUTIONS LLC
www.ContechES.com
9025 Centre Pointe Dr., Suite 400, West Chester, OH 45069
800-338-1122 513-645-7000 513-645-7993 FAX

REFERENCE DETAIL
INTERNALS CS-4
CASCADE SEPARATOR

THIRD ANGLE PROJECTION

UNLESS OTHERWISE SPECIFIED
DIMENSIONS ARE IN INCHES

TOLERANCES:
FRACTIONAL ± 1/16
ANGLES ± 1 DEGREE
TWO PLACE DECIMAL ± 0.06
THREE PLACE DECIMAL ± 0.030

PART NUMBER: 325-003949		
APPROVED BY: M. BROOKS	DRAWN BY: M. BROOKS	
APPROVED BY DATE: 2021.10.21	DRAWN BY DATE: 2021.09.14	REV: B
SCALE: N/A	SHEET 1 OF 1	