Job Name: 26-2648 Midtown Commons Apartments
Job Location: Madisonville, KY
Contractor: Steve Pleasant Excavating

Plant: Beaver Dam
7/20/2026 10:45:23 AM

Tech: S. Felletter
PC:

Structure ID: 6.5 MHC

P1 BX8484-08W12FEBAVF BX BASE w/FLANGE 08W/12F/08EF F/n

P3) 24" - CASTING HEIGHT - 8"	0 lb
P2) 84" x 84" - BX FLAT LID 08inW w/24"Hole F/F - 8"	6409 lb
P1) 84" x 84" - BX BASE w/FLANGE 08W/12F/08EF F/n - 80"	29282 lb
1) CASTING - HOE KY-510 F/C (KY TY.2)	510 lb
1) 84" x 84" - Conseal CS-102 1.00"	0 lb
1) 24" - Conseal CS-102 1.00"	0 lb
1) Hole - 56	0 lb
1) Hole - 32	0 lb
1) Hole - 74 x 52	0 lb
1) Hole - 22	0 lb
8) MH Step ML-10-TDS-NCR - 10"	0 lb
Structure Total:	36201 lb

First pour drawing
First pour weight = 13,550 LBS
Second pour weight = 15,732 LBS

Rim: 430.03' Rim to Invert: 8.06' Slack: 0.72" Sump: 0" Step Position: 180°

Structure Notes: .
1. PER KYTC MANHOLE TYPE C / ASTM C913 SPEC'S.
2. CONCRETE = 4,000 PSI AT 28 DAYS.
3. NO INVERT CHANNEL
4. CASTING BY ICAST (HOE KY-510 F/C).
5. SECONDARY POUR REQ'D FOR EXTENDED FLANGE (8"WD x 12" THICK).
.
REINFORCING PER ASTM A615 (GRADE 60).
- TOP SLAB #5 BAR AT 6" C.C.E.W (DBL MAT).
- WALLS #5 BAR AT 6" C.C.E.W.
- FLOOR #5 BAR AT 12" C.C.E.W.

Position	Elev	Angle	Ext. (cw)	Pipe	Pipe OD	Connector	Hole	Horz Size	Up (_)	Offset
Invert 1	421.97'	0°	50"	48" ADS N-12	54"	Hole 56	56"	56"	-4"	0"
Invert 2	423.59'	125°	59.679"	24" ADS N-12	28"	Hole 32	32"	39.065"	15.44"	-20.75"
Invert 3	422.05'	270°	45"	60" x 38" ELL RCP	71" x 49"	Hole 74 x 52	74" x 52"	74"	-6.04"	-5"
Invert 4	425.74'	310°	84.123"	15" ADS N-12	18"	Hole 22	22"	28.719"	41.74"	-6"
Invert 5										
Invert 6										
Invert 7										
Invert 8										

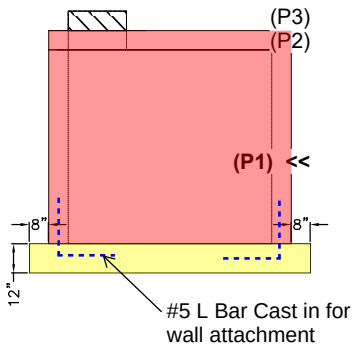

RIGHT-SIDE UP VIEW (int. dimensions)

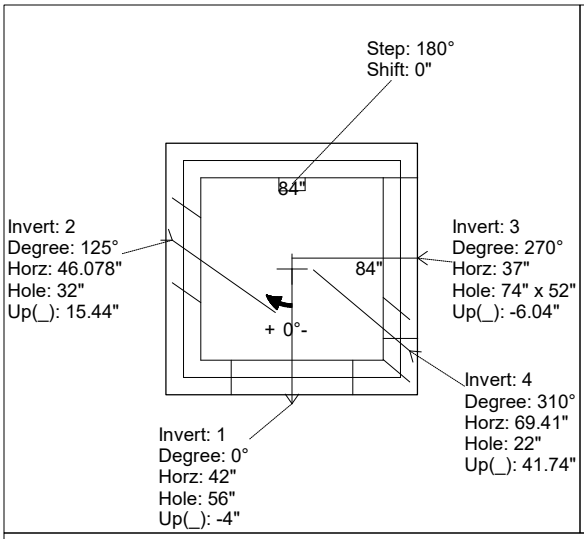

UPSIDE-DOWN VIEW (int. dimenions)

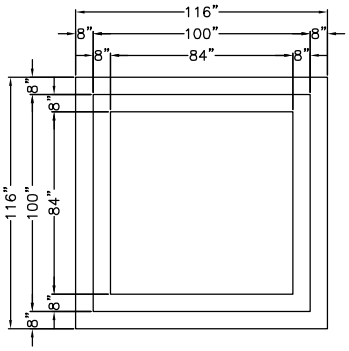

INSIDE WALL DIMENSIONS

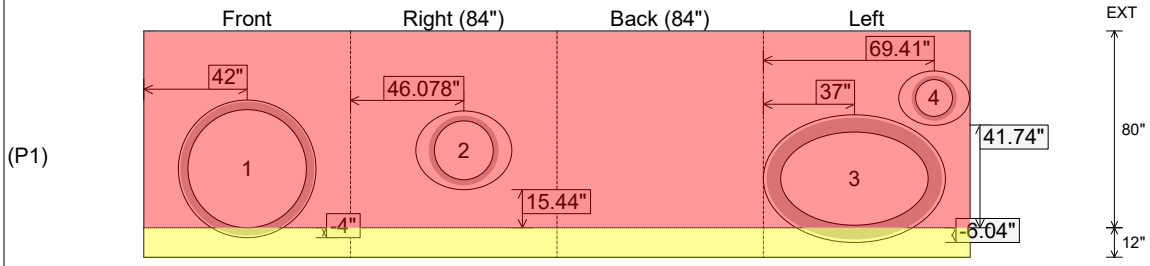

Coating (Int):	Seam Up: Flat	Wall Thickness: 8"	Height (Int): 80"	Weight (Net): 29282 lb
Coating (Ext):	Seam Dn: n/a	Floor Height: 12"	Height (Ext): 92"	Volume (Net): 7.48cu.yd

Job Name: 26-2648 Midtown Commons Apartments
Job Location: Madisonville, KY
Contractor: Steve Pleasant Excavating

Plant: Beaver Dam
7/20/2026 10:45:23 AM

Tech: S. Felletter
PC:

Structure ID: 6.5 MHC

P1 BX8484-08W12FEBAVF BX BASE w/FLANGE 08W/12F/08EF F/n

P3) 24" - CASTING HEIGHT - 8"	0 lb
P2) 84" x 84" - BX FLAT LID 08inW w/24"Hole F/F - 8"	6409 lb
P1) 84" x 84" - BX BASE w/FLANGE 08W/12F/08EF F/n - 80"	29282 lb
1) CASTING - HOE KY-510 F/C (KY TY.2)	510 lb
1) 84" x 84" - Conseal CS-102 1.00"	0 lb
1) 24" - Conseal CS-102 1.00"	0 lb
1) Hole - 56	0 lb
1) Hole - 32	0 lb
1) Hole - 74 x 52	0 lb
1) Hole - 22	0 lb
8) MH Step ML-10-TDS-NCR - 10"	0 lb
Structure Total:	36201 lb

Second pour drawing
First pour weight = 13,550 LBS
Second pour weight = 15,732 LBS

Rim: 430.03' Rim to Invert: 8.06' Slack: 0.72" Sump: 0" Step Position: 180°

Structure Notes: .
1. PER KYTC MANHOLE TYPE C / ASTM C913 SPEC'S.
2. CONCRETE = 4,000 PSI AT 28 DAYS.
3. NO INVERT CHANNEL
4. CASTING BY ICAST (HOE KY-510 F/C).
5. SECONDARY POUR REQ'D FOR EXTENDED FLANGE (8"WD x 12" THICK).
.
REINFORCING PER ASTM A615 (GRADE 60).
- TOP SLAB #5 BAR AT 6" C.C.E.W (DBL MAT).
- WALLS #5 BAR AT 6" C.C.E.W.
- FLOOR #5 BAR AT 12" C.C.E.W.

Position	Elev	Angle	Ext. (cw)	Pipe	Pipe OD	Connector	Hole	Horz Size	Up (_)	Offset
Invert 1	421.97'	0°	50"	48" ADS N-12	54"	Hole 56	56"	56"	-4"	0"
Invert 2	423.59'	125°	59.679"	24" ADS N-12	28"	Hole 32	32"	39.065"	15.44"	-20.75"
Invert 3	422.05'	270°	45"	60" x 38" ELL RCP	71" x 49"	Hole 74 x 52	74" x 52"	74"	-6.04"	-5"
Invert 4	425.74'	310°	84.123"	15" ADS N-12	18"	Hole 22	22"	28.719"	41.74"	-6"
Invert 5										
Invert 6										
Invert 7										
Invert 8										

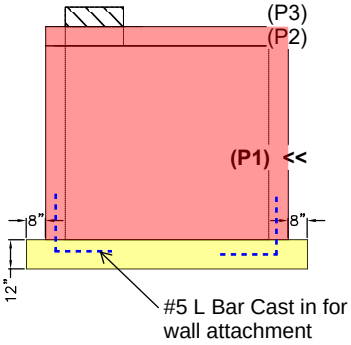

RIGHT-SIDE UP VIEW (int. dimensions)

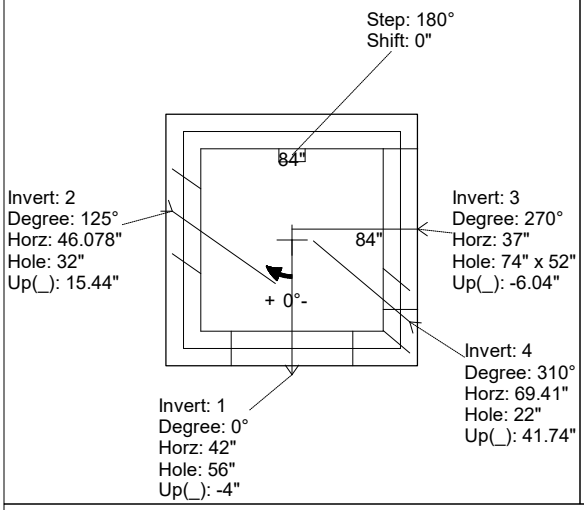

UPSIDE-DOWN VIEW (int. dimenions)

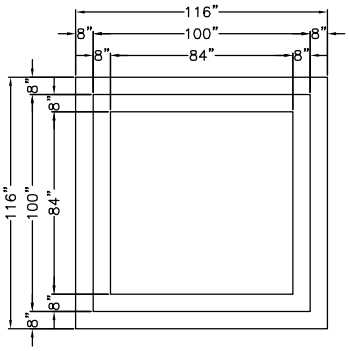

INSIDE WALL DIMENSIONS

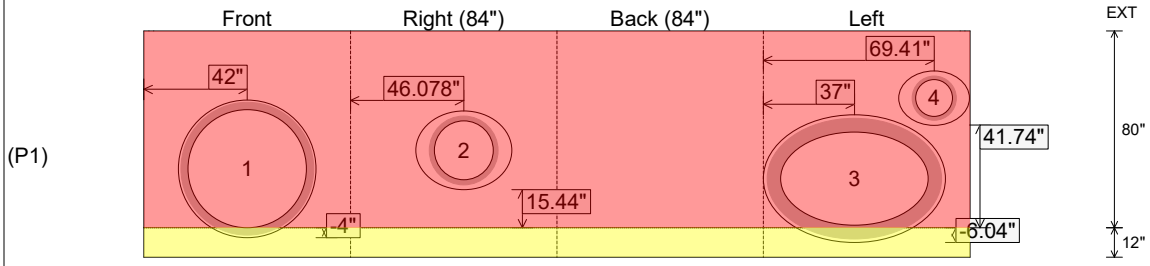

Coating (Int):	Seam Up: Flat	Wall Thickness: 8"	Height (Int): 80"	Weight (Net): 29282 lb
Coating (Ext):	Seam Dn: n/a	Floor Height: 12"	Height (Ext): 92"	Volume (Net): 7.48cu.yd