Job Name: 26-2648 Midtown Commons Apartments
Job Location: Madisonville, KY
Contractor: Steve Pleasant Excavating

Plant: Beaver Dam
7/20/2026 10:44:24 AM

Tech: S. Felletter
PC:

Structure ID: 6.4 DBI 13G

P1 BX3648-08BAVF BOX BASE 8inW, 8inF, Variable Ht F/n

P3) 15" x 27" - P.I.P. - BY OTHERS - 8"	0 lb
P2) 36" x 48" - CB FLAT TOP 8"W w/15"x27" HOLE F/F - 8"	1962 lb
P1) 36" x 48" - BOX BASE 8inW, 8inF, Variable Ht F/n - 43"	6827 lb
1) CASTING - HOE KY-230-G F/G (GRADE)	237 lb
1) 36" x 48" - Conseal CS-102 1.00"	0 lb
2) Hole - 32	0 lb
2) Hole - 4	0 lb
Structure Total:	9026 lb

Structure Notes: .
1. KYTC DBI TYPE 13G / ASTM C-913 SPEC'S.
2. CONCRETE = 4,000 PSI AT 28 DAYS.
3. CASTING BY ICAST (HOE KY-230-G F/G "GRADE").
6. STUB #5 BARS UP 4" AROUND OPENING IN TOP SLAB (SPA@12"C/C).
.
REINFORCING PER ASTM A615 (GRADE 60).
- TOP SLAB (As .62) #5 BARS AT 6" C.C.E.W. (DBL MAT).
- WALLS (As .31) #5 BARS AT 12" C.C.E.W.
- FLOOR (As .31) #5 BARS AT 12" C.C.E.W.

Rim: 430.17' Rim to Invert: 4.98' Slack: 0.76" Sump: 0" Step Position:

Position	Elev	Angle	Ext. (cw)	Pipe	Pipe OD	Connector	Hole	Horz Size	Up (_)	Offset
Invert 1	425.19'	120°	36.619"	24" ADS N-12	28"	Hole 32	32"	36.95"	-4"	-9"
Invert 2	425.27'	0°	26"	24" ADS N-12	28"	Hole 32	32"	32"	-3.04"	0"
Invert 3	428.106'	90°	32"	4" WEEP HOLE	4"	Hole 4	4"	4"	34.992"	0"
Invert 4	428.106'	270°	32"	4" WEEP HOLE	4"	Hole 4	4"	4"	34.992"	0"
Invert 5										
Invert 6										
Invert 7										
Invert 8										

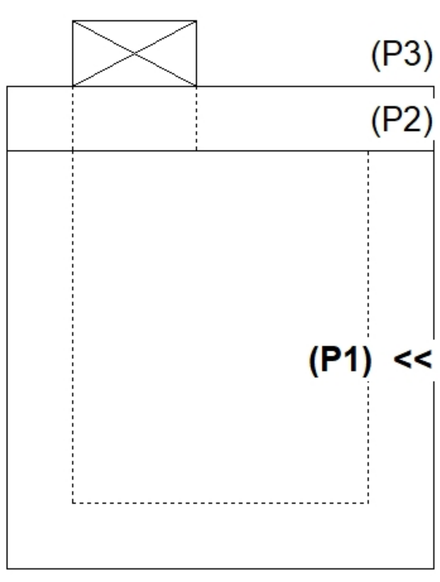

RIGHT-SIDE UP VIEW (int. dimensions)

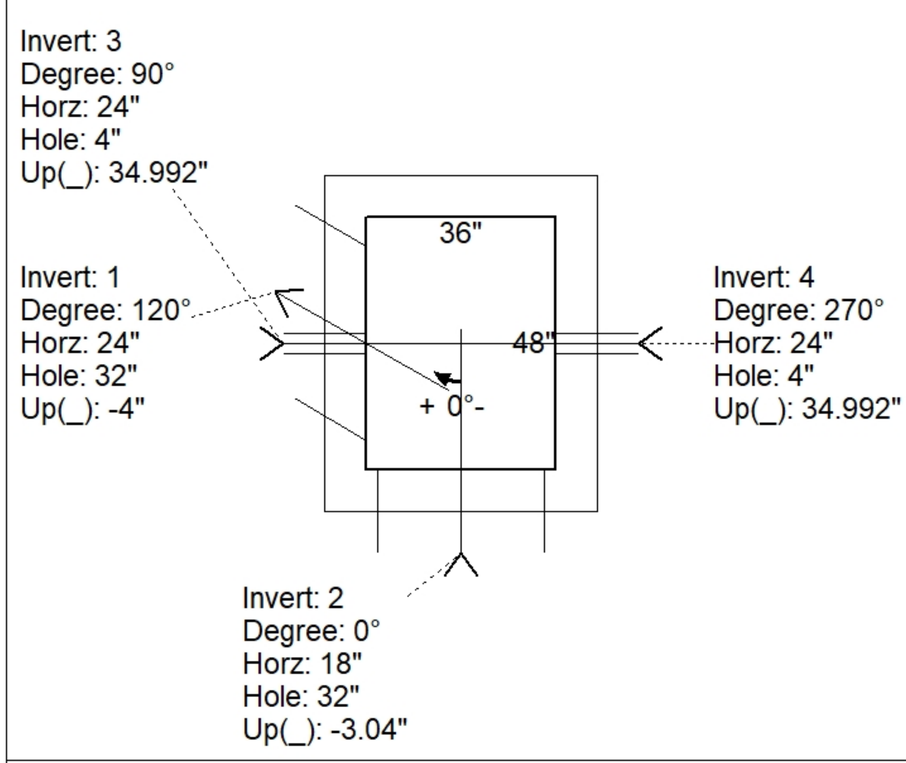

UPSIDE-DOWN VIEW (int. dimenions)

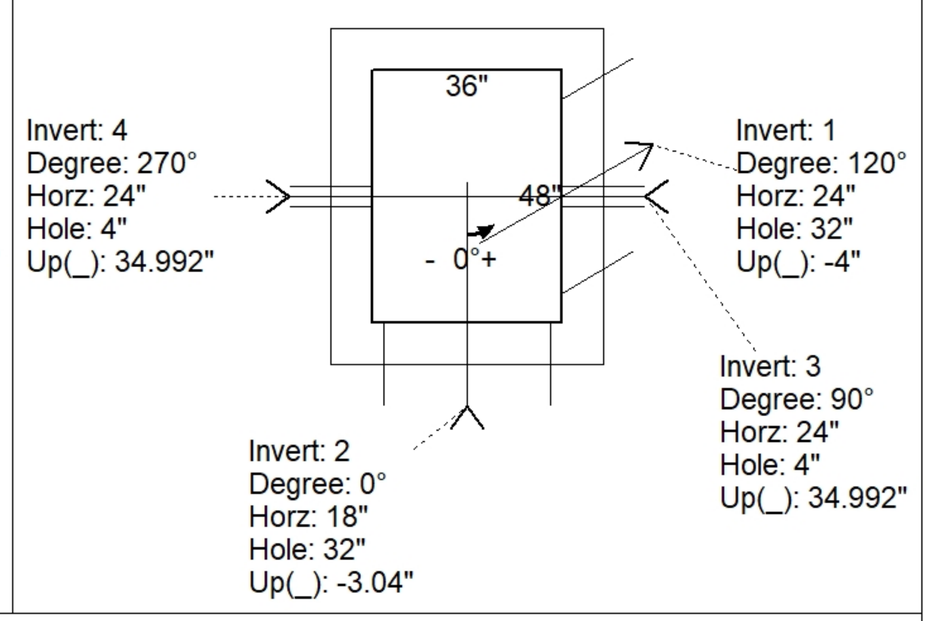

INSIDE WALL DIMENSIONS

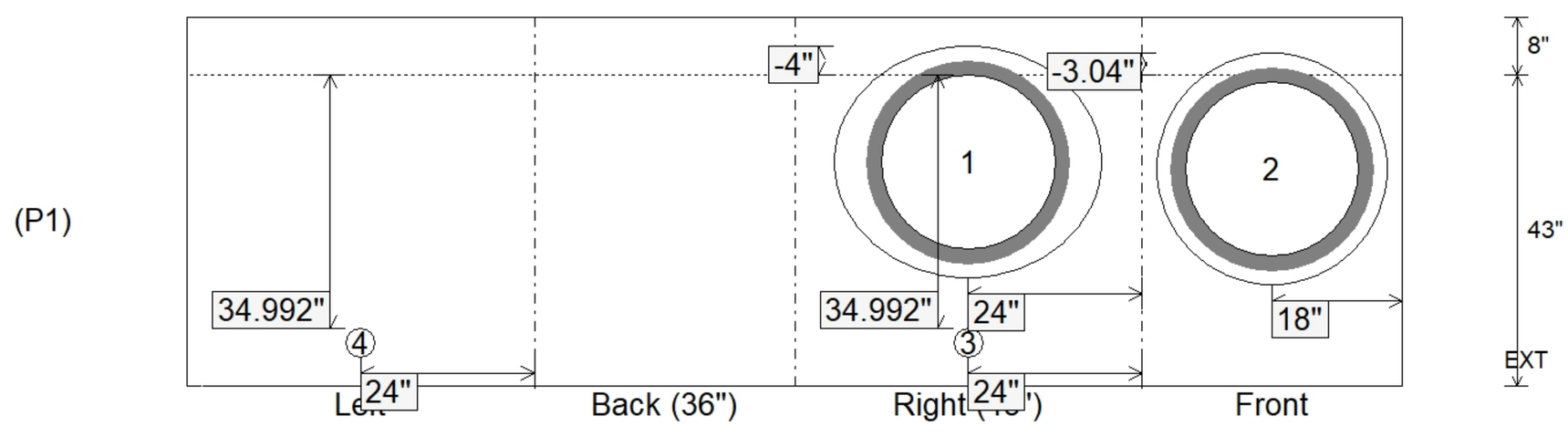

Coating (Int): Coating (Ext):	Seam Up: Flat Seam Dn: n/a	Wall Thickness: 8" Floor Height: 8"	Height (Int): 43" Height (Ext): 51"	Weight (Net): 6827 lb Volume (Net): 1.74cu.yd