Job Name: 26-2648 Midtown Commons Apartments
Job Location: Madisonville, KY
Contractor: Steve Pleasant Excavating

Plant: Beaver Dam
7/20/2026 10:44:23 AM

Tech: S. Felletter
PC:

Structure ID: 6.3 DBI13G

P1 BX3648-08BAVF BOX BASE 8inW, 8inF, Variable Ht F/n

P3) 15" x 27" - P.I.P. - BY OTHERS - 8"	0 lb
P2) 36" x 48" - CB FLAT TOP 8"W w/15"x27" HOLE F/F - 8"	1962 lb
P1) 36" x 48" - BOX BASE 8inW, 8inF, Variable Ht F/n - 28"	5113 lb
1) CASTING - HOE KY-230-G F/G (GRADE)	237 lb
1) 36" x 48" - Conseal CS-102 1.00"	0 lb
1) DOGHOUSE INVRTD - 30"x30"	0 lb
1) Hole - 24	0 lb
2) Hole - 4	0 lb
Structure Total:	7312 lb

Structure Notes: .
1. KYTC DBI TYPE 13G / ASTM C-913 SPEC'S.
2. CONCRETE = 4,000 PSI AT 28 DAYS.
3. CASTING BY ICAST (HOE KY-230-G F/G "GRADE").
6. STUB #5 BARS UP 4" AROUND OPENING IN TOP SLAB (SPA@12"C/C).
.
REINFORCING PER ASTM A615 (GRADE 60).
- TOP SLAB (As .62) #5 BARS AT 6" C.C.E.W. (DBL MAT).
- WALLS (As .31) #5 BARS AT 12" C.C.E.W.
- FLOOR (As .31) #5 BARS AT 12" C.C.E.W.

Rim: 429.77' Rim to Invert: 3.72' Slack: 0.64" Sump: 0" Step Position:

Position	Elev	Angle	Ext. (cw)	Pipe	Pipe OD	Connector	Hole	Horz Size	Up (_)	Offset
Invert 1	426.05'	0°	26"	24" ADS N-12	28"	DOGHOUSE INVRTD 30"x30"	30" x 30"	30"	-3"	0"
Invert 2	426.13'	180°	26"	18" ADS N-12	22"	Hole 24	24"	24"	-2.04"	0"
Invert 3	427.716'	90°	32"	4" WEEP HOLE	4"	Hole 4	4"	4"	19.992"	0"
Invert 4	427.716'	270°	32"	4" WEEP HOLE	4"	Hole 4	4"	4"	19.992"	0"
Invert 5										
Invert 6										
Invert 7										
Invert 8										

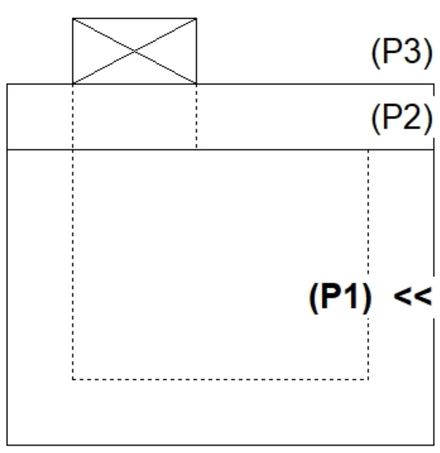

RIGHT-SIDE UP VIEW (int. dimensions)

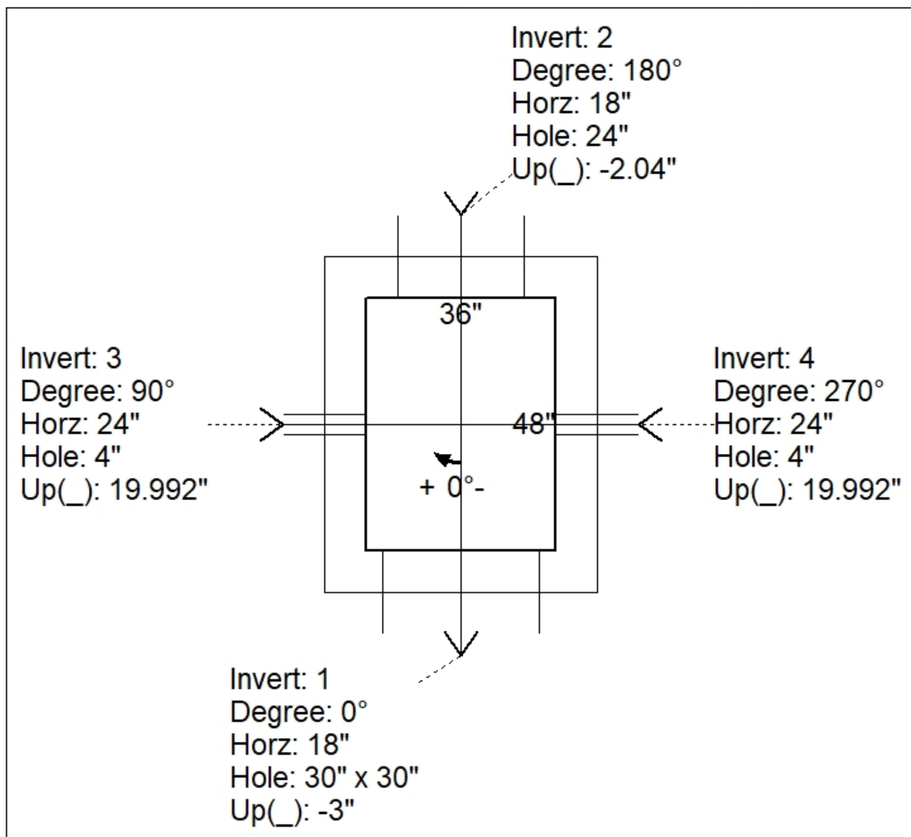

UPSIDE-DOWN VIEW (int. dimenions)

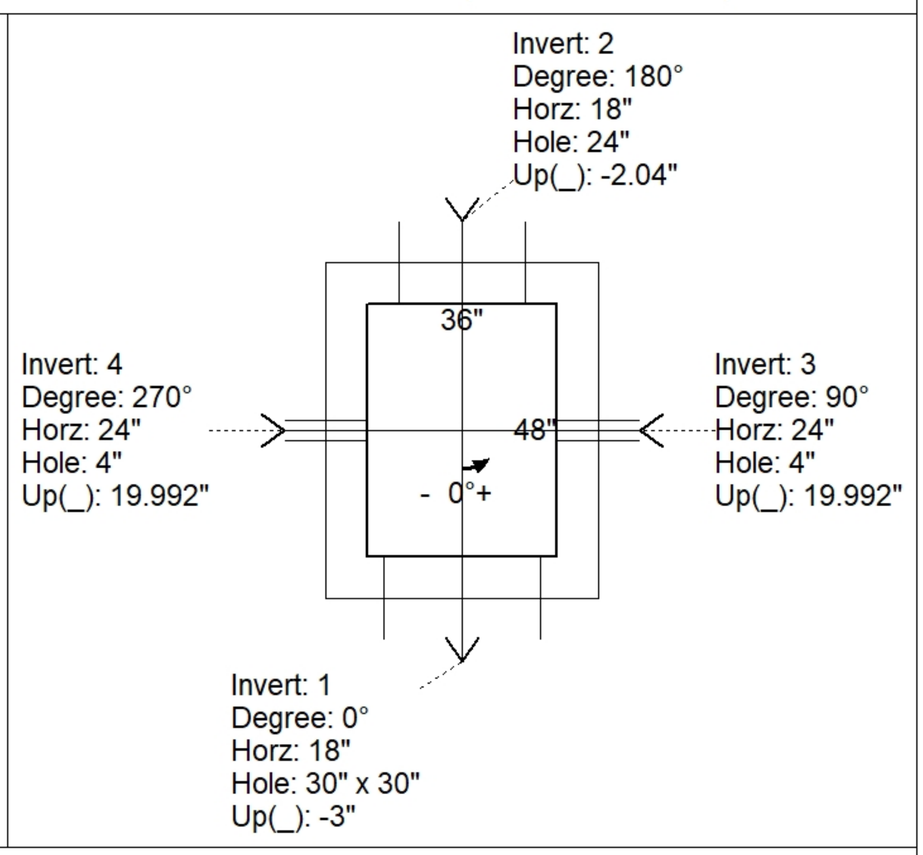

INSIDE WALL DIMENSIONS

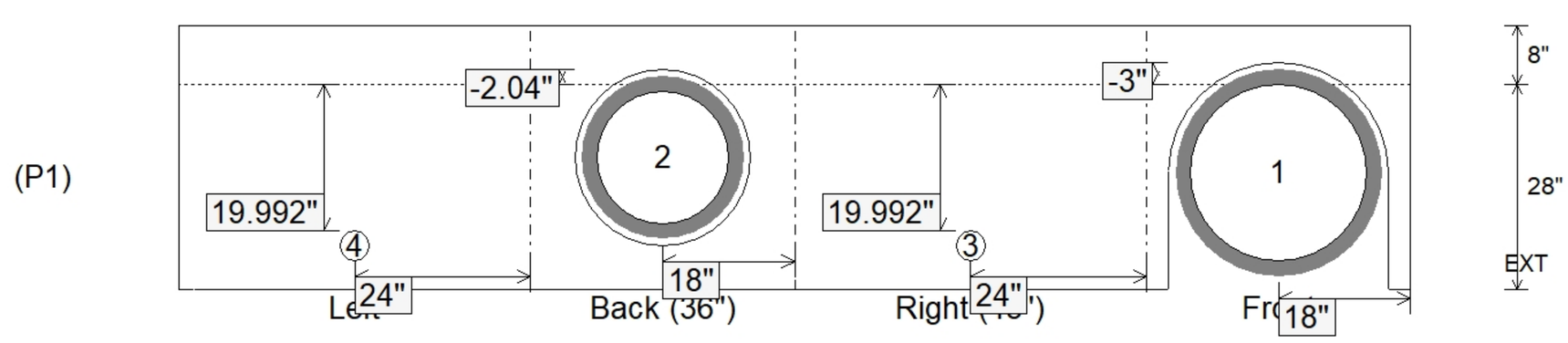

Coating (Int): Coating (Ext):	Seam Up: Flat Seam Dn: n/a	Wall Thickness: 8" Floor Height: 8"	Height (Int): 28" Height (Ext): 36"	Weight (Net): 5113 lb Volume (Net): 1.31cu.yd