Job Name: 26-2648 Midtown Commons Apartments Job Location: Madisonville, KY Contractor: Steve Pleasant Excavating	Plant: Beaver Dam 7/20/2026 10:44:19 AM	Tech: S. Felletter PC:

Structure ID: 4.7 DBI13G

P1 BX3648-08BAVF BOX BASE 8inW, 8inF, Variable Ht F/n

P3) 15" x 27" - P.I.P. - BY OTHERS - 8"	0 lb
P2) 36" x 48" - CB FLAT TOP 8"W w/15"x27" HOLE F/F - 8"	1962 lb
P1) 36" x 48" - BOX BASE 8inW, 8inF, Variable Ht F/n - 35"	5781 lb
1) CASTING - HOE KY-230-G F/G (GRADE)	237 lb
1) 36" x 48" - Conseal CS-102 1.00"	0 lb
2) Hole - 32	0 lb
2) Hole - 4	0 lb
Structure Total:	7980 lb

Structure Notes: .
1. KYTC DBI TYPE 13G / ASTM C-913 SPEC'S.
2. CONCRETE = 4,000 PSI AT 28 DAYS.
3. CASTING BY ICAST (HOE KY-230-G F/G "GRADE").
6. STUB #5 BARS UP 4" AROUND OPENING IN TOP SLAB (SPA@12"C/C).
.
REINFORCING PER ASTM A615 (GRADE 60).
- TOP SLAB (As .62) #5 BARS AT 6" C.C.E.W. (DBL MAT).
- WALLS (As .31) #5 BARS AT 12" C.C.E.W.
- FLOOR (As .31) #5 BARS AT 12" C.C.E.W.

Rim: 432.29' Rim to Invert: 4.33' Slack: 0.96" Sump: 0" Step Position:

Position	Elev	Angle	Ext. (cw)	Pipe	Pipe OD	Connector	Hole	Horz Size	Up (_)	Offset
Invert 1	427.96'	65°	28.262"	24" ADS N-12	28"	Hole 32	32"	35.308"	-4"	7.6"
Invert 2	428.04'	180°	26"	24" ADS N-12	28"	Hole 32	32"	32"	-3.04"	0"
Invert 3	430.21'	90°	17"	4" WEEP HOLE	4"	Hole 4	4"	4"	27"	-15"
Invert 4	430.21'	270°	47"	4" WEEP HOLE	4"	Hole 4	4"	4"	27"	15"
Invert 5										
Invert 6										
Invert 7										
Invert 8										

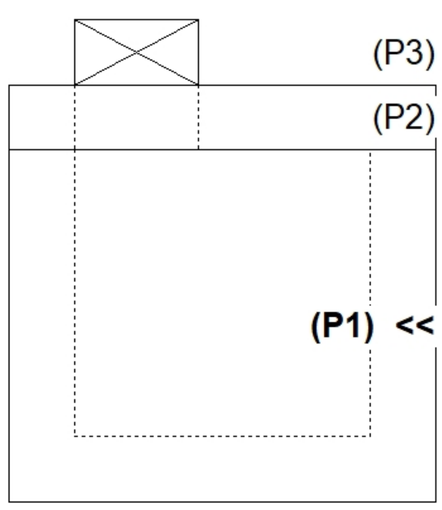

RIGHT-SIDE UP VIEW (int. dimensions)

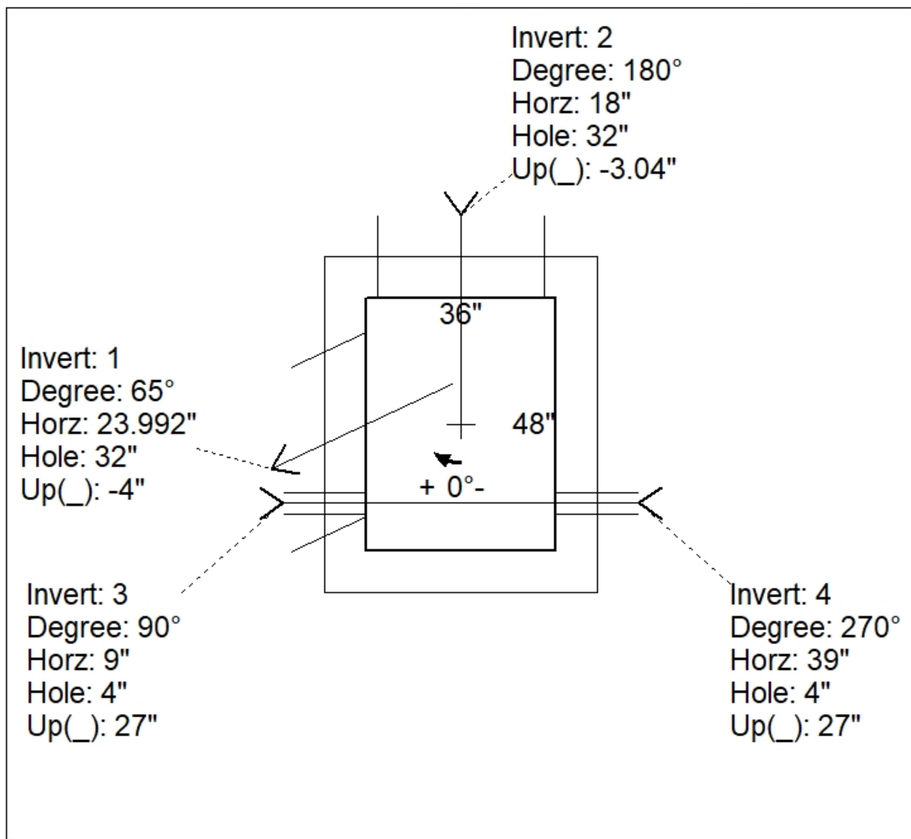

UPSIDE-DOWN VIEW (int. dimenions)

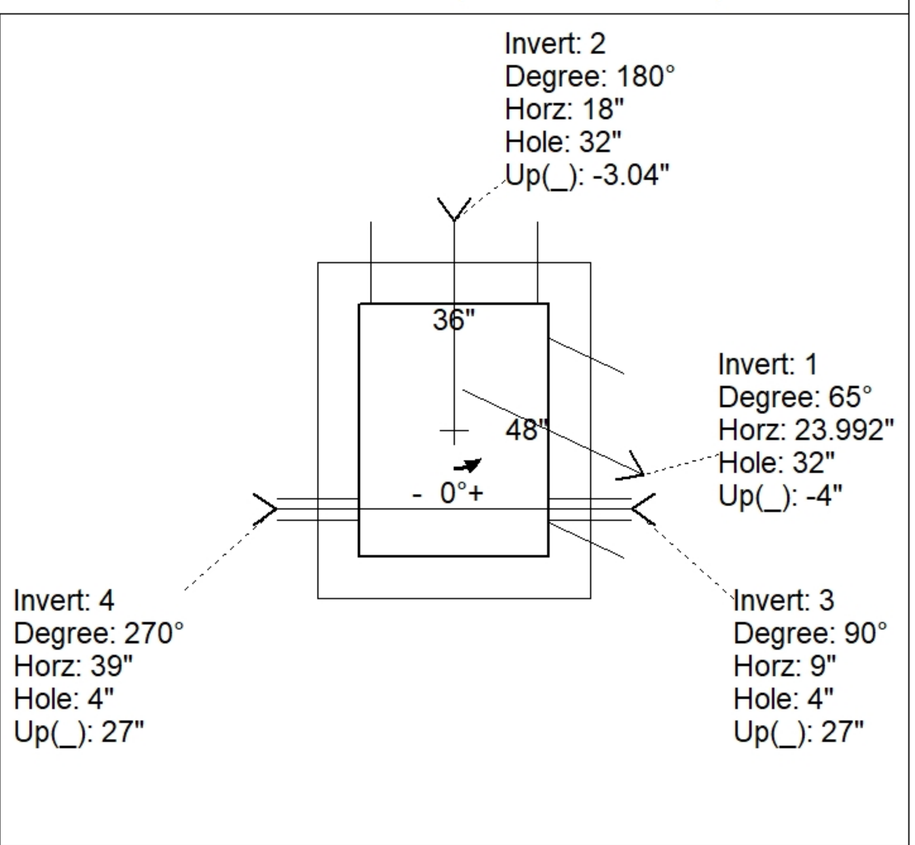

INSIDE WALL DIMENSIONS

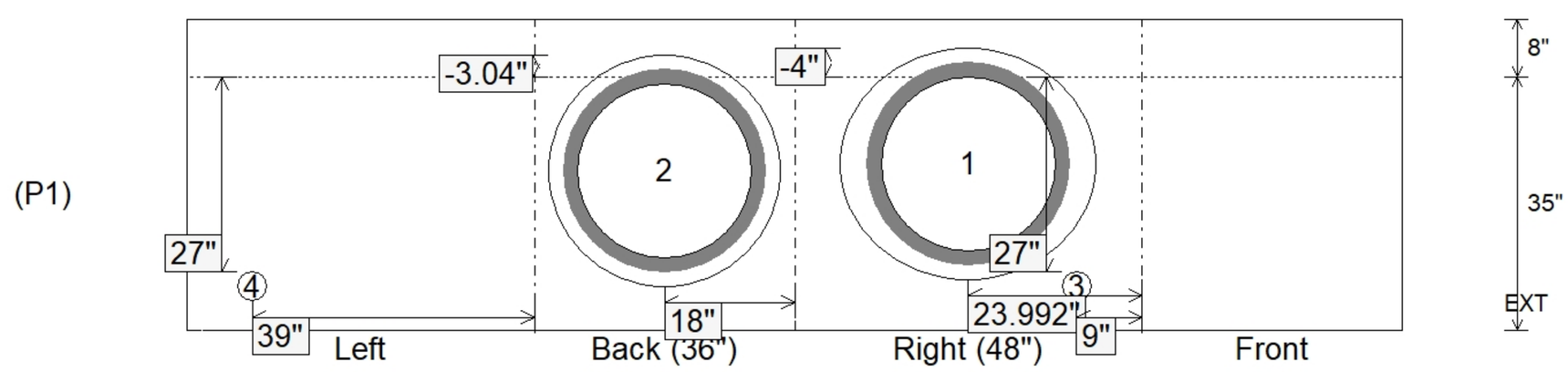

Coating (Int): Coating (Ext):	Seam Up: Flat Seam Dn: n/a	Wall Thickness: 8" Floor Height: 8"	Height (Int): 35" Height (Ext): 43"	Weight (Net): 5781 lb Volume (Net): 1.48cu.yd