Job Name: 26-2648 Midtown Commons Apartments Job Location: Madisonville, KY Contractor: Steve Pleasant Excavating	Plant: Beaver Dam 7/20/2026 10:46:16 AM	Tech: S. Felletter PC:

Structure ID: 4.4 MHA

P3 GR4 **GRADE RING F/F**

P4) 24" - CASTING HEIGHT - 8"	0 lb	
P3) 24" - GRADE RING F/F - 4"	270 lb	
P2) 48" - ECC CONE w/ 24" HOLE F/G - 30"	2050 lb	
P1) 48" - MH BASE T/n - 36"	3001 lb	
1) CASTING - HOE KY-206 F/C (KY TY1)	206 lb	
1) 48" - Conseal CS-102 1.00"	0 lb	
2) 24" - Conseal CS-102 1.00"	0 lb	
1) Hole - 32	0 lb	
1) Hole - 22	0 lb	
1) Hole - 30	0 lb	
6) MH Step ML-10-TDS-NCR - 10"	0 lb	

Structure Total:	5527 lb	

Structure Notes: .
1. PER KYTC MH A / ASTM C478 SPEC'S.
2. CONCRETE = 4,000 PSI AT 28 DAYS.
3. CASTING BY ICAST (HOE KY-206 F/C).
.
REINFORCING PER ASTM A615 (GRADE 60.)
- TOP SLAB (As .62) #5 BARS AT 6" C.C.E.W..
- RISER/WALLS (As .18)
- FLOOR (As .37) #5 BARS AT 10" C.C.E.W.

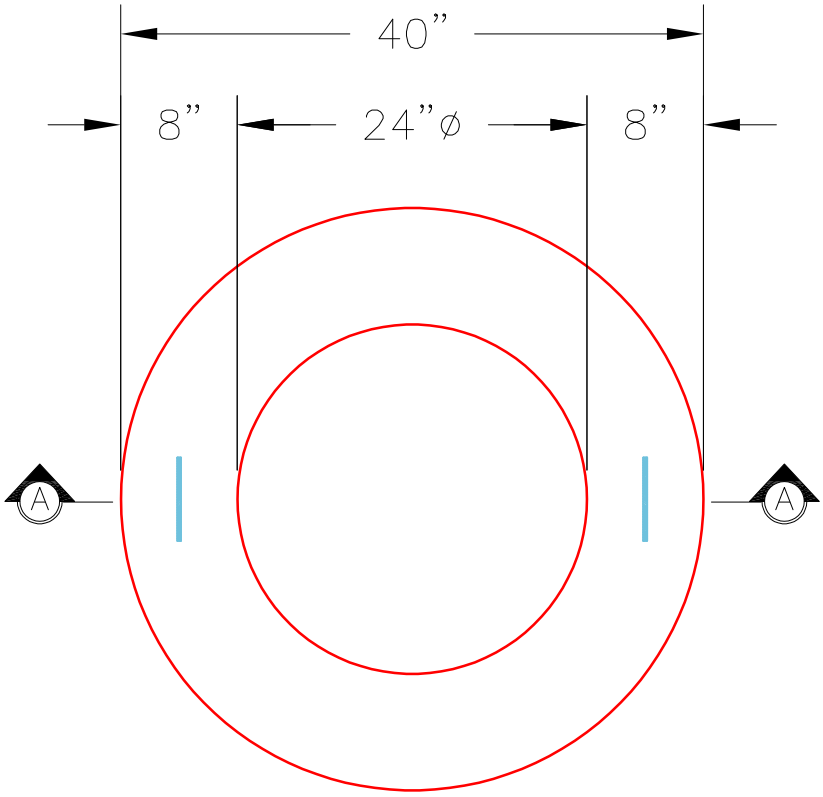

PLAN VIEW

NOTES:

1. GRADE RINGS MEET OR EXCEED THE FOLLOWING SPECIFICATIONS:
   –CONCRETE: 4,000 PSI @ 28 DAYS.
   –REINFORCING: (1) #3 HOOP CENTERED (GRADE 60)
2. WEIGHT: 4" 270 Lbs.

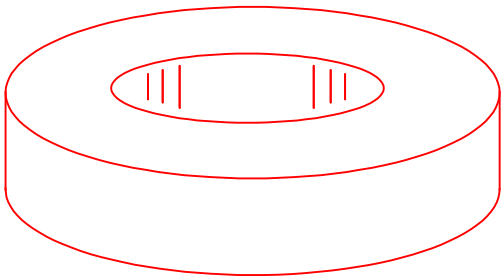

ISOMETRIC VIEW

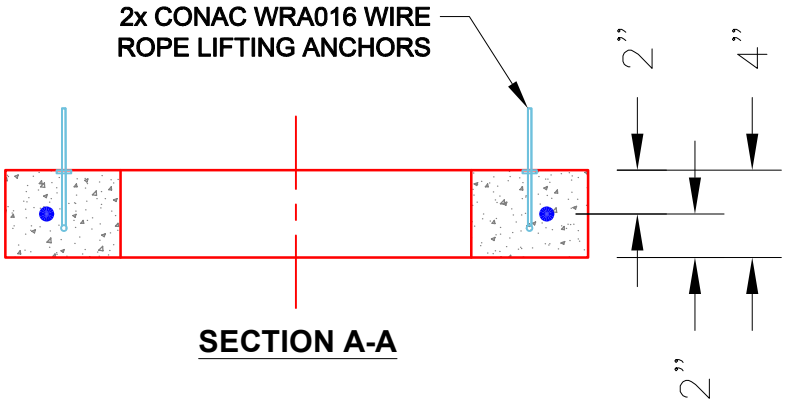

SECTION A-A

Coating (Int): Coating (Ext):	Seam Up: Flat Seam Dn: Flat	Wall Thickness: 8"	Height (Ext): 4"	Weight (Net): 270 lb Volume (Net): 0.07cu.yd