Job Name: 26-2560 Ashtree Subdivision Unit 3 Ph. 1 Job Location: Nicholasville, KY Contractor: The Allen Company, Inc.	Plant: Beaver Dam 8/24/2026 8:17:01 AM	Tech: J. ROSS PC: E. BRADLEY	

Structure ID: E4 SS-MHD

P2 MH048RS48SCDARED MH RISER w/DROP/ConBlock-CDA Red

P6) 24" - CASTING HEIGHT - 7"	0 lb
P5) 24" - GRADE RING w/ConBlock-CDA Red - 4"	270 lb
P4) 48" - ECC CONE w/ 24" HOLE, w/ConBlock-CDA Red - 36"	2251 lb
P3) 48" - MH RISER w/DROP/ConBlock-CDA Red - 48"	3329 lb
P2) 48" - MH RISER w/DROP/ConBlock-CDA Red - 48"	3353 lb
P1) 48" - MH BASE w/DROP/ConBlock-CDA Red - 36"	3725 lb
1) 48" - MH INVERT CHANNEL w/ConBlock-CDA Red - FULL HEIGHT	1440 lb
1) JOINT WRAP - 0.065"x6"x50' CONSEAL CS212	0 lb
1) JOINT WRAP PRIMER - CONSEAL CS-75 (1 gal.)	0 lb
1) CASTING - HOE MC-315 F/C Sanitary	258 lb
3) 48" - Conseal CS-102 1.00" (Double)	0 lb
2) 24" - Conseal CS-102 1.00" (Double)	0 lb
2) PSX - 12-08 NYLO	16 lb
1) Drop Tee - 8" PVC	0 lb
1) Drop Elbow - 8" PVC	0 lb
14) MH Step ML-10-TDS-NCR - 10"	0 lb
Structure Total:	14643 lb

Rim: 944.61' Rim to Invert: 14.75' Slack: 0" Sump: 2" Step Position: 0°

Structure Notes: .
1. PER ASTM C478 SPECIFICATIONS.
2. CONCRETE = 4,000 PSI AT 28 DAYS.
3. REINFORCING PER ASTM A615 (GRADE 60).
- CONE (As .12)
- RISER/WALLS (As .12)
- FLOOR (As .31) #5 BARS AT 12" C.C.E.W.
4. CASTING BY OTHERS
5. ADMIXTURE = CONBLOCK-CDA RED

Position	Elev	Angle	Ext. (cw)	Pipe	Pipe OD	Connector	Hole	Horz Size	Up (_)	Offset
Invert 1										
Invert 2										
Invert 3										
Invert 4										
Invert 5										
Invert 6										
Invert 7										
Invert 8										

RIGHT-SIDE UP VIEW (int. dimensions)

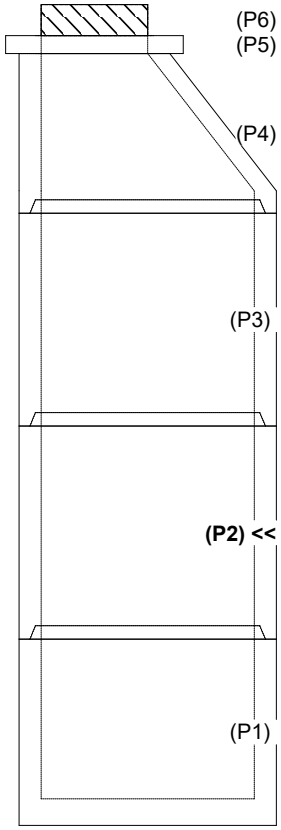

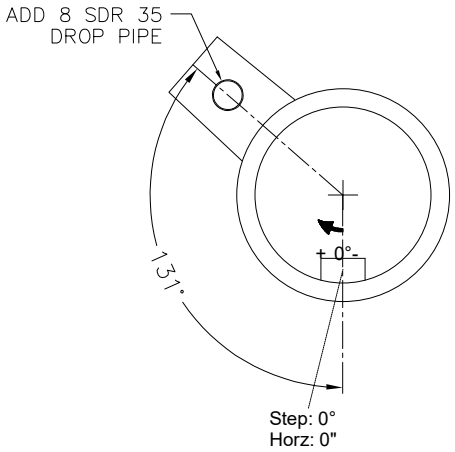

INSIDE WALL DIMENSIONS

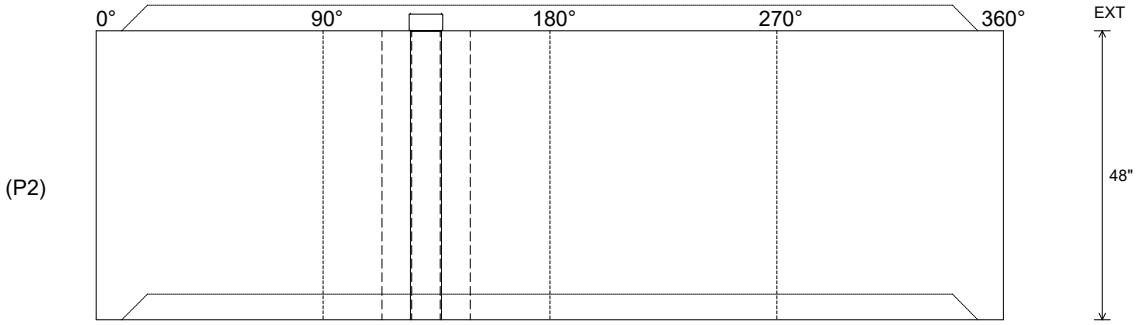

Coating (Int): Coating (Ext):	Seam Up: Tongue Seam Dn: Groove	Wall Thickness: 5" Floor Height: 0"	Height (Int): 48" Height (Ext): 48"	Weight (Net): 3353 lb Volume (Net): 0.86cu.yd