Job Name: 26-2513- Stagner Farms Subdivision Sec. 2 Job Location: Bowling Green, KY Contractor: R.A. Alexander & Sons, Inc.	Plant: 100 9/22/2026 8:16:57 AM	Tech: Jared - A PC: Trevor Lewis	

Structure ID: B1 ST-CI

P1 MH048BA42 MH BASE

P3) 24" x 36" - CASTING HEIGHT - 6.25"	0 lb
P2) 48" - MH FLAT TOP w/24"x36" Hole - 12"	1300 lb
P1) 48" - MH BASE - 42"	3991 lb
1) CASTING - EJ 4510 F/G	445 lb
1) 48" - Conseal CS-102 1.00"	0 lb
1) 24" x 36" - Conseal CS-102 1.00"	0 lb
1) Hole - 22	0 lb
1) Hole - 18	0 lb
3) MH Step ML-10-TDS-NCR - 10"	0 lb
Structure Total:	5736 lb

Structure Notes: .
1. EJ 4510 F/G PROVIDED BY ICAST.
2. PER ASTM C478 SPECIFICATIONS.
3. CONCRETE = 4,000 PSI AT 28 DAYS.
4. REINFORCING PER ASTM A615 (GRADE 60).
- TOP SLAB (As .62) #5 BARS AT 6" C.C.E.W..
- RISER/WALLS (As .12)
- FLOOR (As .31) #5 BARS AT 12" C.C.E.W.

Rim: 559.06' Rim to Invert: 5.16' Slack: 2.17" Sump: 0.5" Step Position: 180

Position	Elev	Angle	Ext. (cw)	Pipe	Pipe OD	Connector	Hole	Horz Size	Up (_)	Offset
Invert 1	553.9'	0°	0"	18" CMP	19"	Hole 22	22"	22.854"	0"	0"
Invert 2	553.9'	90°	45.553"	15" CMP	16"	Hole 18	18"	18.451"	0"	0"
Invert 3										
Invert 4										
Invert 5										
Invert 6										
Invert 7										
Invert 8										

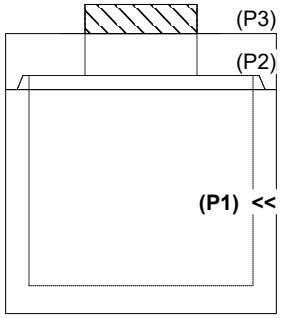

RIGHT-SIDE UP VIEW (int. dimensions)

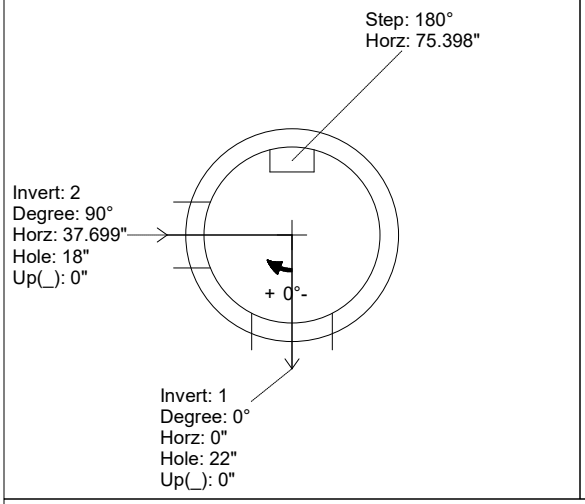

UPSIDE-DOWN VIEW (int. dimenions)

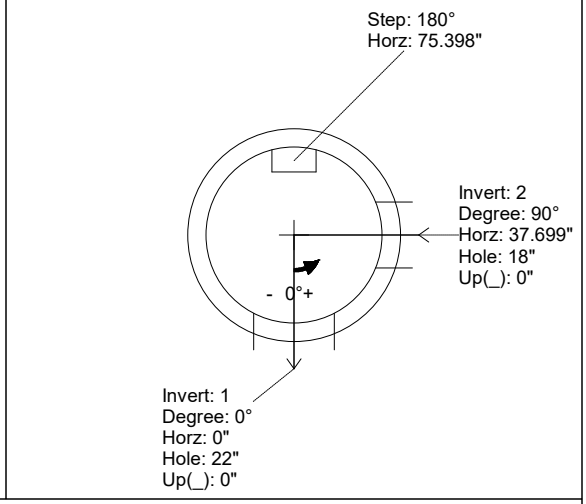

INSIDE WALL DIMENSIONS

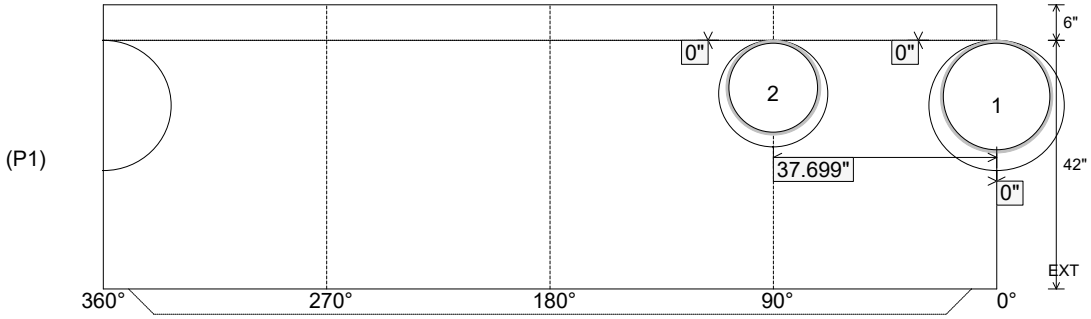

Coating (Int): Coating (Ext):	Seam Up: Tongue Seam Dn: n/a	Wall Thickness: 5" Floor Height: 6"	Height (Int): 42" Height (Ext): 48"	Weight (Net): 3991 lb Volume (Net): 1.02cu.yd