Job Name: 26-2509 - Airpark Expansion Industrial Subdivision Job Location: Owensboro, KY 42301 Contractor: Koberstein Contracting, Inc.	Plant: 100 6/25/2026 1:30:45 PM	Tech: Jared - F PC: A. Chambers	

Structure ID: CC-4 HW

P1 HWSF24 **24" - SLOPED & FLARED HEADWALL F/F**

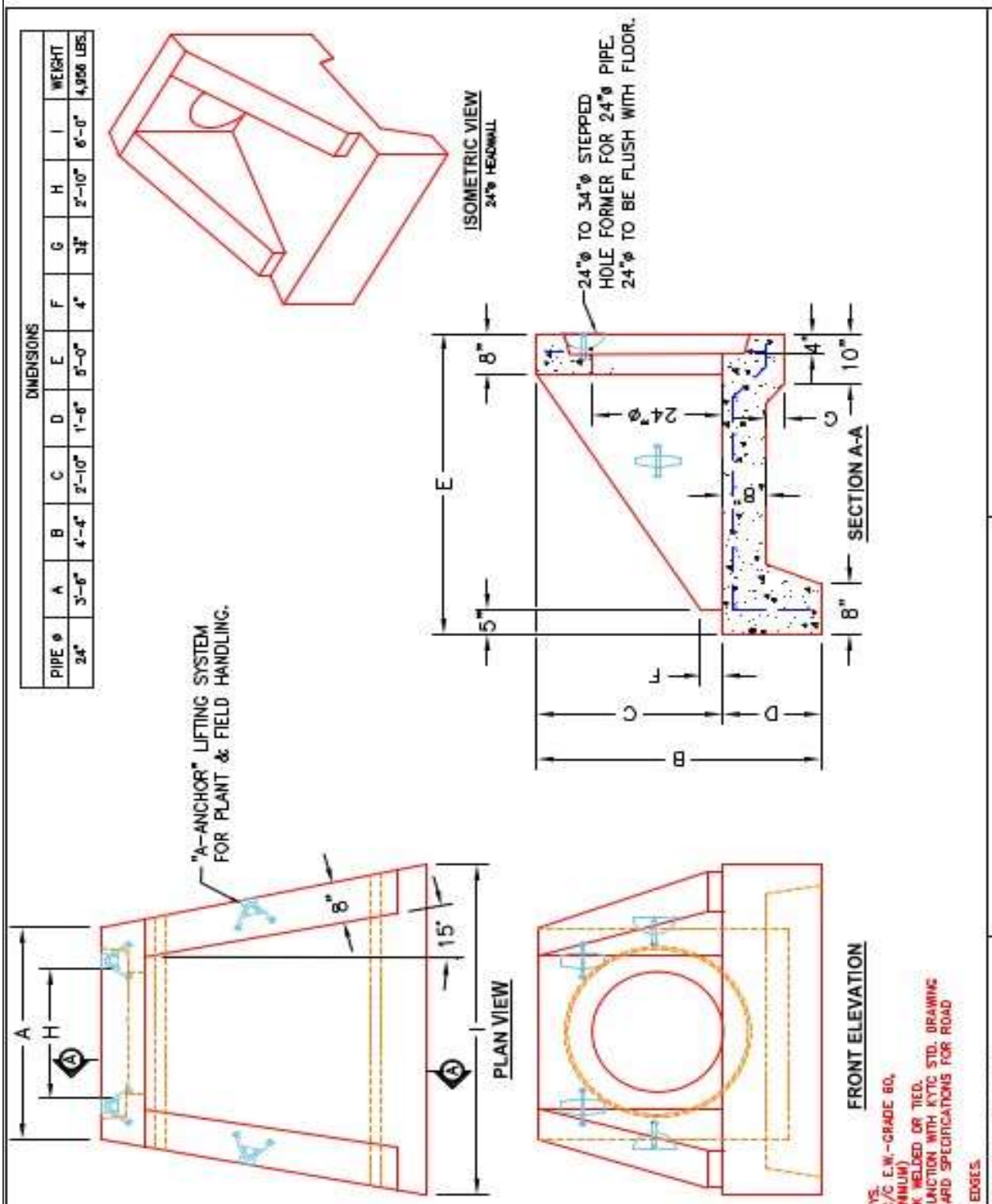

DIMENSIONS											
PIPE ø	A	B	C	D	E	F	G	H	I	WEIGHT
24"	3'-6"	4'-4"	2'-10"	1'-6"	5'-0"	4"	32"	2'-10"	6'-0"	4,956 LBS.

~NOTES:

1. CONCRETE: 4500 PSI @ 28 DAYS.
2. REINFORCING: #4 BAR @ 12" C/C E.W.-GRADE 60, (WITH 2" CONCRETE COVER MINIMUM)
3. REINFORCING BARS TO BE TACK WELDED OR TIED.
4. DRAWING TO BE USED IN CONJUNCTION WITH KYTC STD. DRAWING RDH-020-03 AND THE STANDARD SPECIFICATIONS FOR ROAD AND BRIDGE CONSTRUCTION.
5. 1" CHAMFER ON ALL EXPOSED EDGES.

PRODUCTION WORK ORDER

QUALITY CONTROL CHECKLIST

- ☐ ALL DIMENSIONS CORRECT.
- ☐ LIFTERS INSTALLED.
- ☐ STEPPED HF CORRECT SIZE.
- ☐ REINFORCING CORRECT.
- ☐ DISSIPATOR BLOCK INSTALLED.
- ☐ EDGES CHAMFERED.
- ☐ ALL PATCHWORK ACCEPTABLE.

PRODUCT I.D.: HWSF24	DESCRIPTION: KYTC 24"ø SLOPED & FLARED HEADWALL
PRODUCT VIEW: RIGHT SIDE UP	CUSTOMER: STOCK
PLANT: BEAVER DAM, KY.	PROJECT: STOCK INVENTORY
WEIGHT: 4,956 LBS.	STRUCTURE ID.: N/A
TOP SECTION JOINT: N/A	QUOTE/SALES ORDER NO: N/A
BASE SECTION JOINT: N/A	CHECK: J.H. ROSS, PE / DRAWING: N. RICHARDS
QC CHECK INITIALS:	DATE: REV. 4/22/24 / SCALE: NTS / PG. 1 of 1

THIS DRAWING IS THE PROPERTY OF INFRASTRUCTURE PRECAST, INC. ANY USE OR DUPLICATION OF THIS DRAWING WITHOUT PRIOR AUTHORIZATION IS STRICTLY PROHIBITED.