Job Name: 26-2484 Bass Pro Shops Outpost Paducah Job Location: Paducah, KY Contractor: Central Paving Co. of Paducah, Inc.	Plant: Beaver Dam 6/16/2026 8:02:36 AM	Tech: S. Felletter PC: A. Chambers	

Structure ID: Y5 ST-CI

P1 MH048BAVF **MH BASE Custom Ht T/n**

P3) 24" x 24" - CASTING HEIGHT - 5"	0 lb
P2) 48" - MH FLAT TOP w/24"x24" Hole F/G - 12"	1500 lb
P1) 48" - MH BASE Custom Ht T/n - 69"	5551 lb
1) CASTING - HOE KY-465 SET (CBI TY F)	465 lb
1) 48" - Conseal CS-102 1.00"	0 lb
1) 24" x 24" - Conseal CS-102 1.00"	0 lb
1) Hole - 30	0 lb
1) Hole - 24	0 lb
1) Hole - 16	0 lb
Structure Total:	7516 lb

Structure Notes: .
1. PER ASTM C478 SPECIFICATIONS.
2. CONCRETE = 4,000 PSI AT 28 DAYS.
3. CASTING BY ICAST (HOE 465 F/G/H).
.
REINFORCING PER ASTM A615 (GRADE 60).
- TOP SLAB (As .62) #5 BARS AT 6" C.C.E.W.
- RISER/WALLS (As .12)
- FLOOR (As .31) #5 BARS AT 12" C.C.E.W.

Rim: 369.8' Rim to Invert: 7.04' Slack: 0.38" Sump: 1.9" Step Position: 0°

Position	Elev	Angle	Ext. (cw)	Pipe	Pipe OD	Connector	Hole	Horz Size	Up (_)	Offset
Invert 1	362.76'	0°	0"	24" HDPE	27.8"	Hole 30	30"	32.406"	0"	0"
Invert 2	363.26'	177°	89.588"	18" HDPE	21.2"	Hole 24	24"	25.133"	6.3"	0"
Invert 3	363'	254°	128.561"	12" HDPE	14.5"	Hole 16	16"	16.312"	3.53"	0"
Invert 4										
Invert 5										
Invert 6										
Invert 7										
Invert 8										

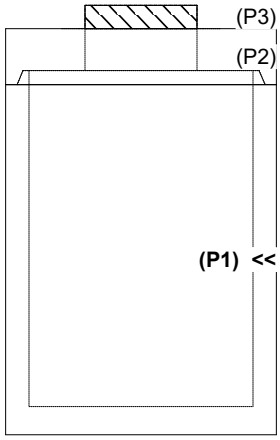

RIGHT-SIDE UP VIEW (int. dimensions)

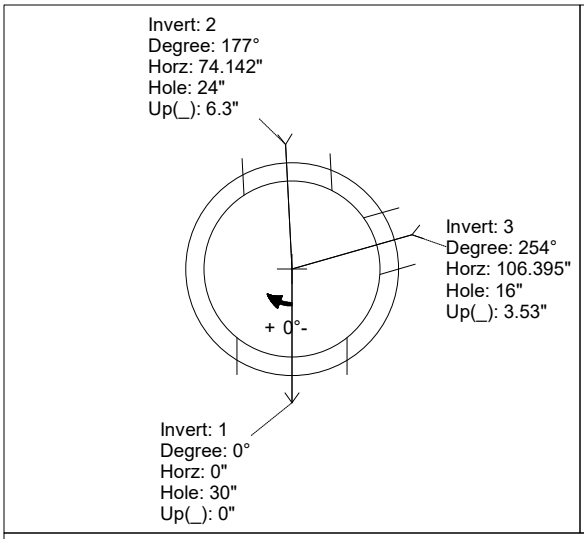

UPSIDE-DOWN VIEW (int. dimenions)

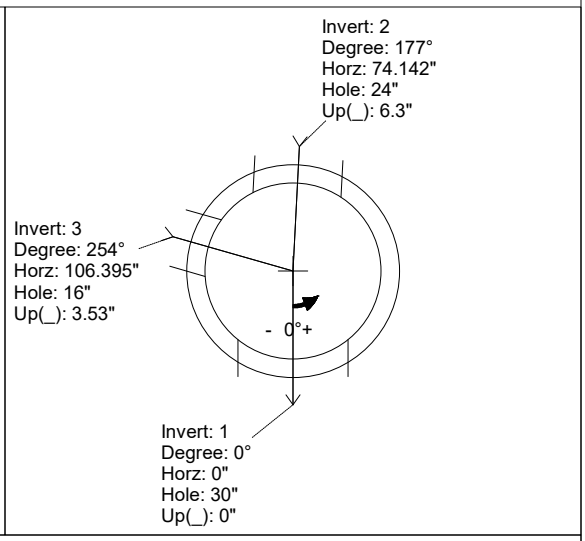

INSIDE WALL DIMENSIONS

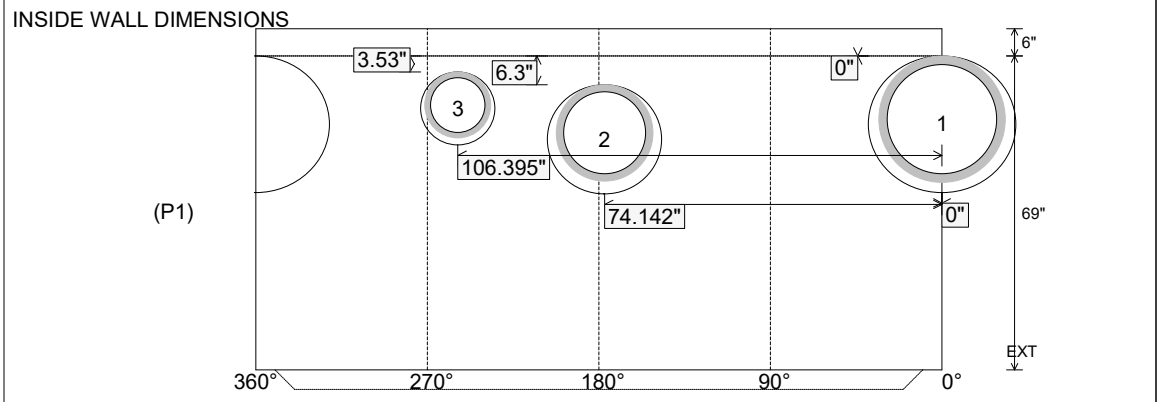

Coating (Int): Coating (Ext):	Seam Up: Tongue Seam Dn: n/a	Wall Thickness: 5" Floor Height: 6"	Height (Int): 69" Height (Ext): 75"	Weight (Net): 5551 lb Volume (Net): 1.42cu.yd