Job Name: 26-2478B - Marcelina Site Improvements San. Job Location: Clarksville, TN 37043 Contractor: Core & Main LP	Plant: Beaver Dam 9/14/2026 4:50:10 PM	Tech: J. Coppage PC: T. Lewis	

Structure ID: FS10 SS-MH

P5 MH060RS60SCDR MH RISER SPECIAL w/ConBlock-CDA Red T/G

P9) 24" - CASTING HEIGHT - 6"	0 lb
P8) 24" - GRADE RING w/ConBlock-CDA Red F/F - 4"	270 lb
P7) 60" - MH FLAT TOP w/24" Hole ECC w/ConBlock-CDA Red F/G - 13"	2800 lb
P6) 60" - MH RISER w/ConBlock-CDA Red T/G - 72"	7516 lb
P5) 60" - MH RISER SPECIAL w/ConBlock-CDA Red T/G - 60"	6149 lb
P4) 60" - MH RISER w/ConBlock-CDA Red T/G - 72"	7516 lb
P3) 60" - MH RISER w/ConBlock-CDA Red T/G - 60"	6264 lb
P2) 60" - MH RISER w/ConBlock-CDA Red T/G - 60"	6264 lb
P1) 60" - MH BASE Custom Ht, 12"F w/ConBlock-CDA Red T/n - 24"	6446 lb
1) JOINT WRAP - 0.065"x6"x50' CONSEAL CS212	0 lb
1) JOINT WRAP PRIMER - CONSEAL CS-75 (1 gal.)	0 lb
1) 60" - MH INVERT CHANNEL w/ConBlock-CDA Red - FULL HEIGHT	2962 lb
6) 60" - Conseal CS-102 1.00" (Double)	0 lb
2) 24" - Conseal CS-102 1.00" (Double)	0 lb
1) PSX - 16Y NYLO	8 lb
3) PSX - 12-08 NYLO	24 lb
29) MH Step ML-10-TDS-NCR - 10"	0 lb
Structure Total:	46218 lb

Rim: 510.8' Rim to Invert: 30.76' Slack: 1.12" Sump: 3" Step Position: 59°

Structure Notes: .
1. (6" TALL CASTING PROVIDED BY OTHERS)
2. PER ASTM C478 SPECIFICATIONS.
3. CONCRETE = 4,000 PSI AT 28 DAYS.
4. ADMIXTURE = CONBLOCK CDA RED.
5. REINFORCING PER ASTM A615 (GRADE 60).
6. INTERNAL DROP PROVIDED BY OTHERS - ICAST TO SUPPLY OPENINGS & BOOTS

Position	Elev	Angle	Ext. (cw)	Pipe	Pipe OD	Connector	Hole	Horz Size	Up (_)	Offset
Invert 1										
Invert 2										
Invert 3	499'	210°	132"	8" PVC SDR35	8.5"	PSX 12-08 NYLO	12"	12.081"	7.75"	0"
Invert 4	499.7'	298°	187.25"	8" PVC SDR35	8.5"	PSX 12-08 NYLO	12"	12.081"	16.125"	0"
Invert 5										
Invert 6										
Invert 7										
Invert 8										

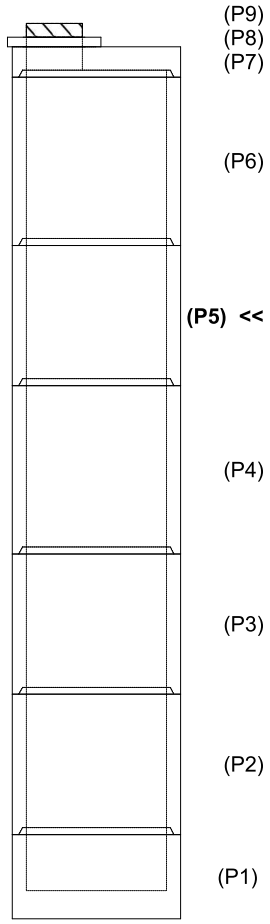

RIGHT-SIDE UP VIEW (int. dimensions)

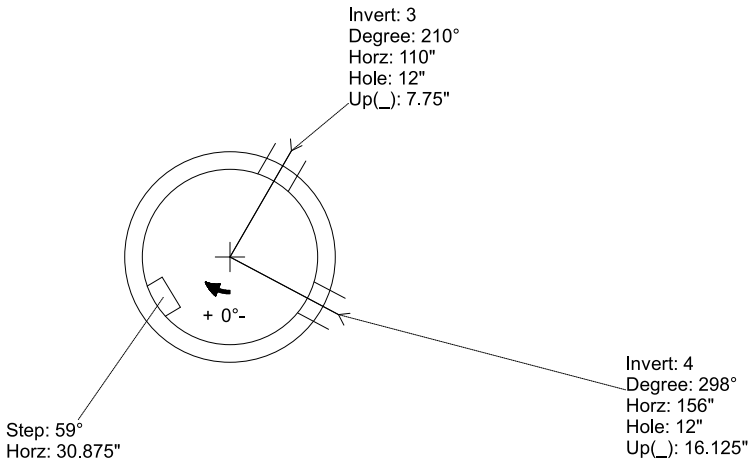

INSIDE WALL DIMENSIONS

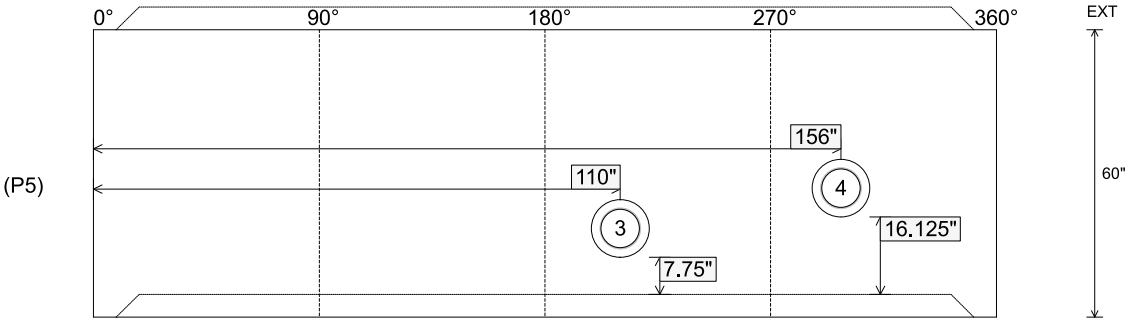

Coating (Int): Coating (Ext):	Seam Up: Tongue Seam Dn: Groove	Wall Thickness: 6" Floor Height: 0"	Height (Int): 60" Height (Ext): 60"	Weight (Net): 6149 lb Volume (Net): 1.57cu.yd