Job Name: 26-2478 - Marcelina Site Improvements (Storm) Job Location: Clarksville, TN 37043 Contractor: Core & Main LP	Plant: Beaver Dam, KY 10/8/2026 8:24:40 AM	Tech: J. Coppage PC: T. Lewis	

Structure ID: S10 ST-CI

P1 BX2436-08BVF **BOX BASE 8inW, 8inF, Variable Ht**

P2) 24" x 36" - CASTING HEIGHT - 6.5"	0 lb
P1) 24" x 36" - BOX BASE 8inW, 8inF, Variable Ht - 43"	5269 lb
1) 24" x 36" - Conseal CS-102 1.00"	0 lb
1) Hole - 24	0 lb
1) Hole - 20	0 lb
Structure Total:	5269 lb

Structure Notes: .
1. PER ASTM C-913 SPECIFICATIONS
2. CONCRETE: 4,000 PSI AT 28 DAYS
3. REINFORCEMENT: #5 BAR @ 12" C.C. E.W. (GRADE 60)
4. NO STEPS & NO INVERT CHANNEL
5. 6.5" CASTING SUPPLIED BY OTHERS

Rim: 513.15' Rim to Invert: 4.33' Slack: 2.46" Sump: 0" Step Position:

Position	Elev	Angle	Ext. (cw)	Pipe	Pipe OD	Connector	Hole	Horz Size	Up (_)	Offset
Invert 1	508.82'	90°	26"	18" HDPE	21.2"	Hole 24	24"	24"	-1.6"	0"
Invert 2	508.82'	270°	26"	15" HDPE	17.6"	Hole 20	20"	20"	-1.3"	0"
Invert 3										
Invert 4										
Invert 5										
Invert 6										
Invert 7										
Invert 8										

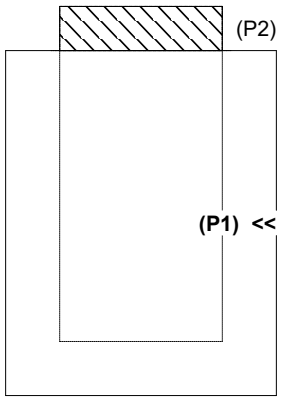

RIGHT-SIDE UP VIEW (int. dimensions)

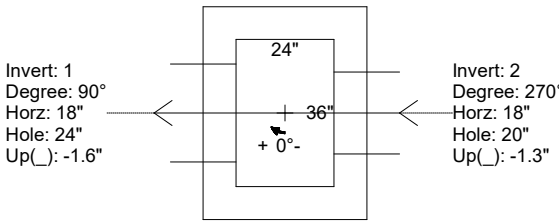

UPSIDE-DOWN VIEW (int. dimenions)

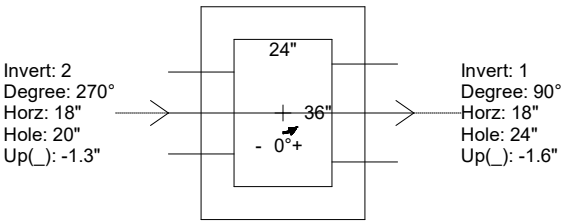

INSIDE WALL DIMENSIONS

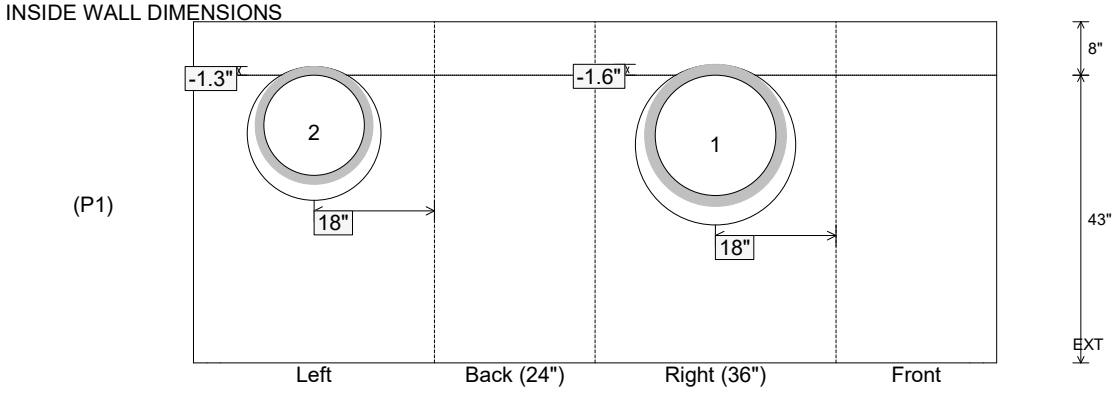

Coating (Int): Coating (Ext):	Seam Up: Flat Seam Dn: n/a	Wall Thickness: 8" Floor Height: 8"	Height (Int): 43" Height (Ext): 51"	Weight (Net): 5269 lb Volume (Net): 1.35cu.yd