Job Name: 26-2324 880717 Shepper & Converse Ave
Job Location: Plain City, OH
Contractor: Contech Engineering Solutions

PC: C. Goff
TECH: S. Felletter
Plant: Beaver Dam

Structure ID: **10-CS-8**

Spec: Storm-Pipe Centered	Rim: 928.26'	Sump: 82.044"	Floor (Bot): 913.14'
Type: STM.MH	Invert: 921.06'	Floor (Top): 914.223'	Overall Height: 13.833'
Size: 96"	Rim to Invert: 7.2'	Floor Height: 13"	Slack: 15.444"

Structure Notes: 4" CASTING BY OTHERS
LIFTING ANCHORS TO BE INSTALLED
ON THE OUTSIDE OF THE STRUCTURE
ICAST TO INSTALL INTERNALS
CONTECH'S LOGO AS WELL AS THE
INLET AND OUTLET MUST BE
STENCILED ONTO THE STRUCTURE
P2 & P3 RISERS TO BE MECHANICALLY
ATTACHED PRIOR TO INSTALL

STRUCTURE SUMMARY:

P5) 24" - CASTING HEIGHT - 4"	0 lb
P4) 96" - MH FLAT TOP SPEC. (2 - 24"ø HOLES) F/G - 17"	10015 lb
P3) 96" - MH RISER T/G - 36"	8292 lb
P2) 96" - MH RISER T/G - 72"	17043 lb
P1) 96" - MH MONOBASE 13F, Custom Ht T/n - 24"	17113 lb
1) CVSTENCILING	0 lb
1) ASSEMBLY REQUIRED	0 lb
3) 96" - Conseal CS-102 1.00"	0 lb
2) Hole - 36	0 lb
Structure Total:	52463 lb

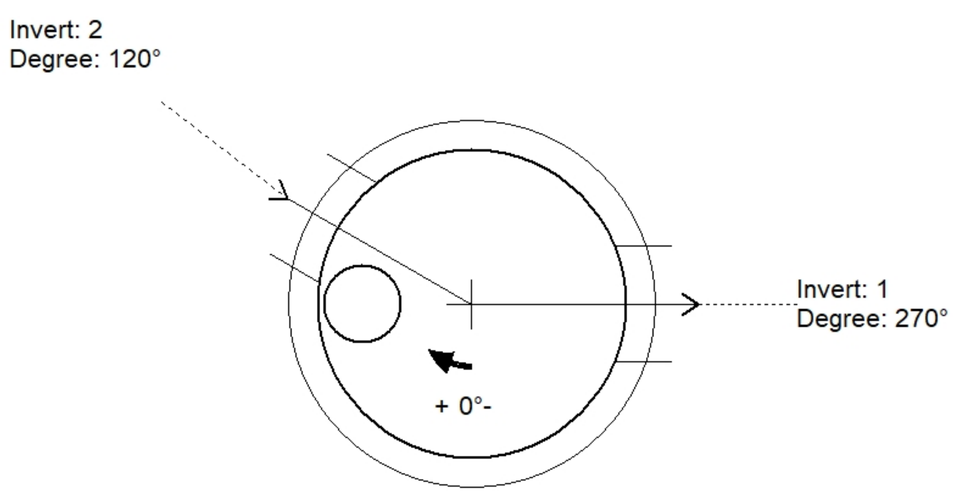

Position	Elev	Angle	Pipe	Pipe OD	Hole	Connector	Up (_)	Ref
Rim	928.26'							
Reducer								
Invert 1	921.06'	270°	24" RCP B WALL	30"	36"	Hole 36	47.044"	P2
Invert 2	921.06'	120°	24" RCP B WALL	30"	36"	Hole 36	47.044"	P2
Invert 3								
Invert 4								
Invert 5								
Invert 6								
Invert 7								
Invert 8								

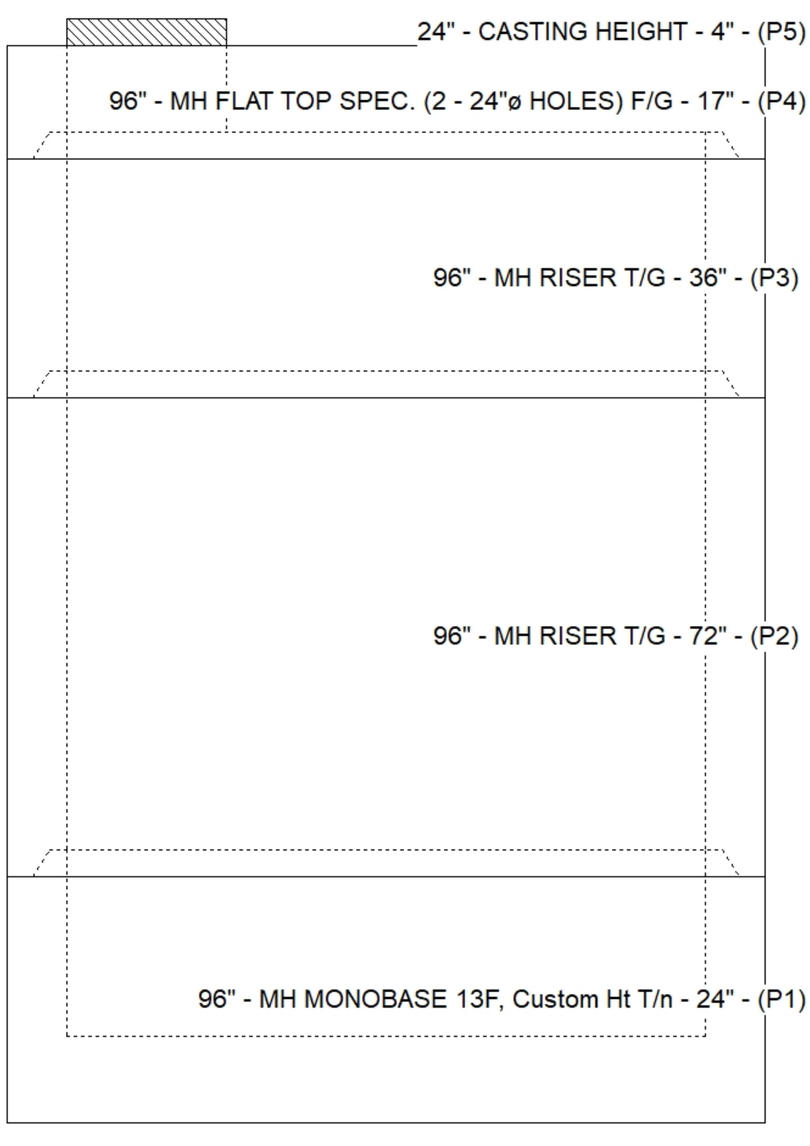

Default - Interior Dimensions

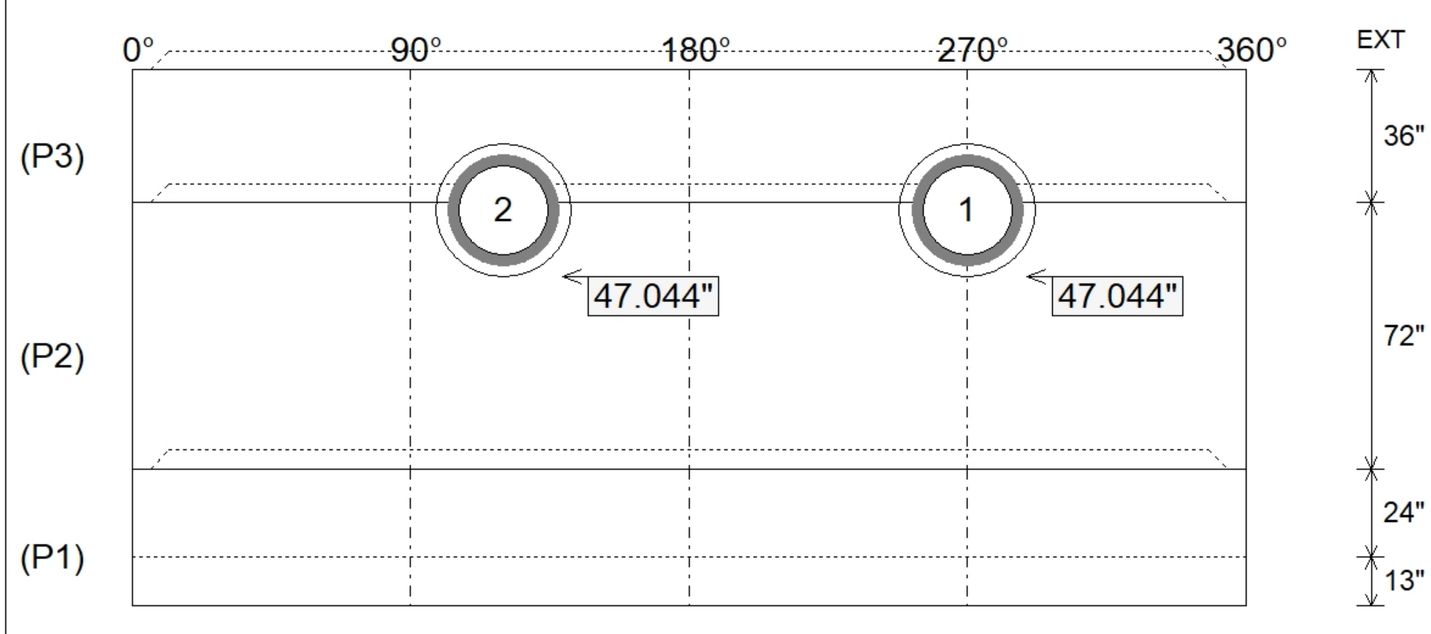

Submittal Drawing
5/14/2026 10:47:40 AM

SUBMITTAL
APPROVED BY: