Job Name: 26-2279 - Keenland Trace Unit 14
Job Location: Owensboro, KY
Contractor: Winwater Hartford KY Co.

PC: A. Chambers
TECH: Jared - F
Plant: 100

Structure ID: **40 SS-MH**

Spec: Sanitary	Rim: 393.84'	Sump: 3"	Floor (Bot): 386.5'
Type: SAN.MH w/Xypex	Invert: 387.25'	Floor (Top): 387'	Overall Height: 7.333'
Size: 48"	Rim to Invert: 6.59'	Floor Height: 6"	Slack: 0.08"

Structure Notes: .
1. PER ASTM C478 SPECIFICATIONS.
2. CONCRETE = 4,000 PSI AT 28 DAYS.
3. CASTING BY ICAST (HOE MC-315 F/C RWRA)
4. ADMIXTURE = XYPEX C-500 NF RED

.
REINFORCING PER ASTM A615 (GRADE 60).
- CONE (As .12)
- RISER/WALLS (As .12)
- FLOOR (As .31) #5 BARS AT 12" C.C.E.W.

STRUCTURE SUMMARY:

P4)	24" - CASTING HEIGHT - 7"	0 lb
P3)	24" - XYPEX GRADE RING - 3"	202 lb
P2)	48" - ECC XYPEX CONE w/ 24" HOLE - 42"	3116 lb
P1)	48" - MH BASE w/XYPEX - 30"	3207 lb
1)	JOINT WRAP - 0.065"x6"x50' CONSEAL CS212	0 lb
1)	JOINT WRAP PRIMER - CONSEAL CS-75 (1 gal.)	0 lb
1)	ADMIXTURE XYPEX C-500 NF RED	0 lb
1)	48" - MH INVERT CHANNEL w/XYPEX - FULL HEIGHT	1440 lb
1)	CASTING - HOE MC-315 F/C RWRA	258 lb
1)	48" - Conseal CS-102 1.00" (Double)	0 lb
2)	24" - Conseal CS-102 1.00" (Double)	0 lb
2)	PSX - 16Y NYLO	16 lb
1)	PSX - 12-08 NYLO	8 lb
6)	MH Step ML-10-TDS-NCR - 10"	0 lb
	Structure Total:	8247 lb

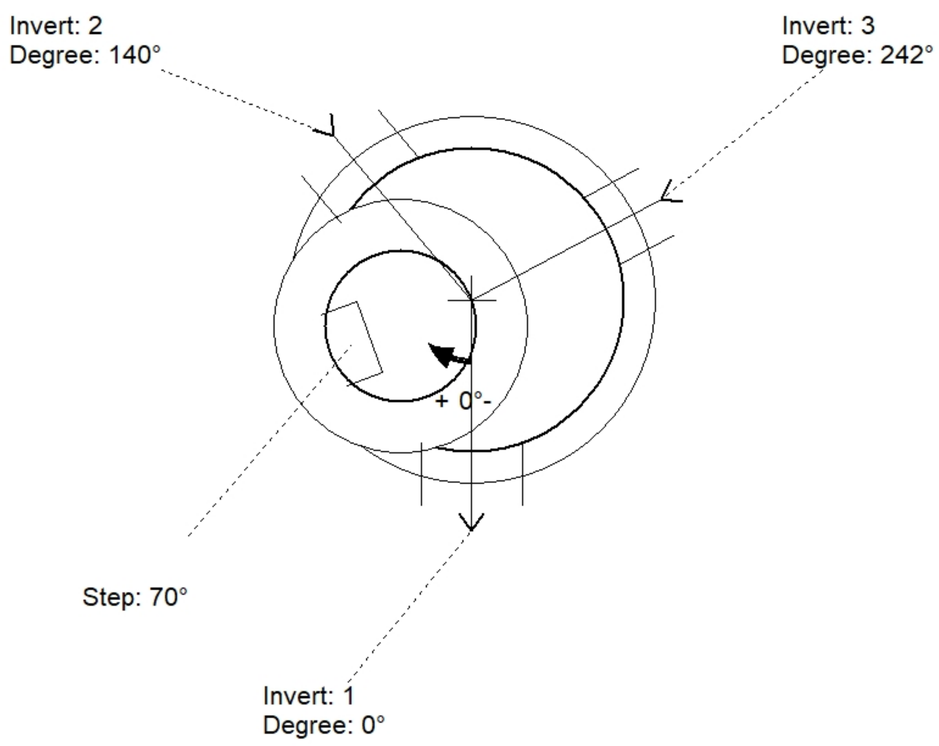

Position	Elev	Angle	Pipe	Pipe OD	Hole	Connector	Up (_)	Ref
Rim	393.84'							
Reducer								
Invert 1	387.25'	0°	10" PVC SDR35	10.5"	16"	PSX 16Y NYLO	0"	P1
Invert 2	387.29'	140°	10" PVC SDR35	10.5"	16"	PSX 16Y NYLO	0.48"	P1
Invert 3	387.29'	242°	8" PVC SDR35	8.5"	12"	PSX 12-08 NYLO	1.48"	P1
Invert 4								
Invert 5								
Invert 6								
Invert 7								
Invert 8								

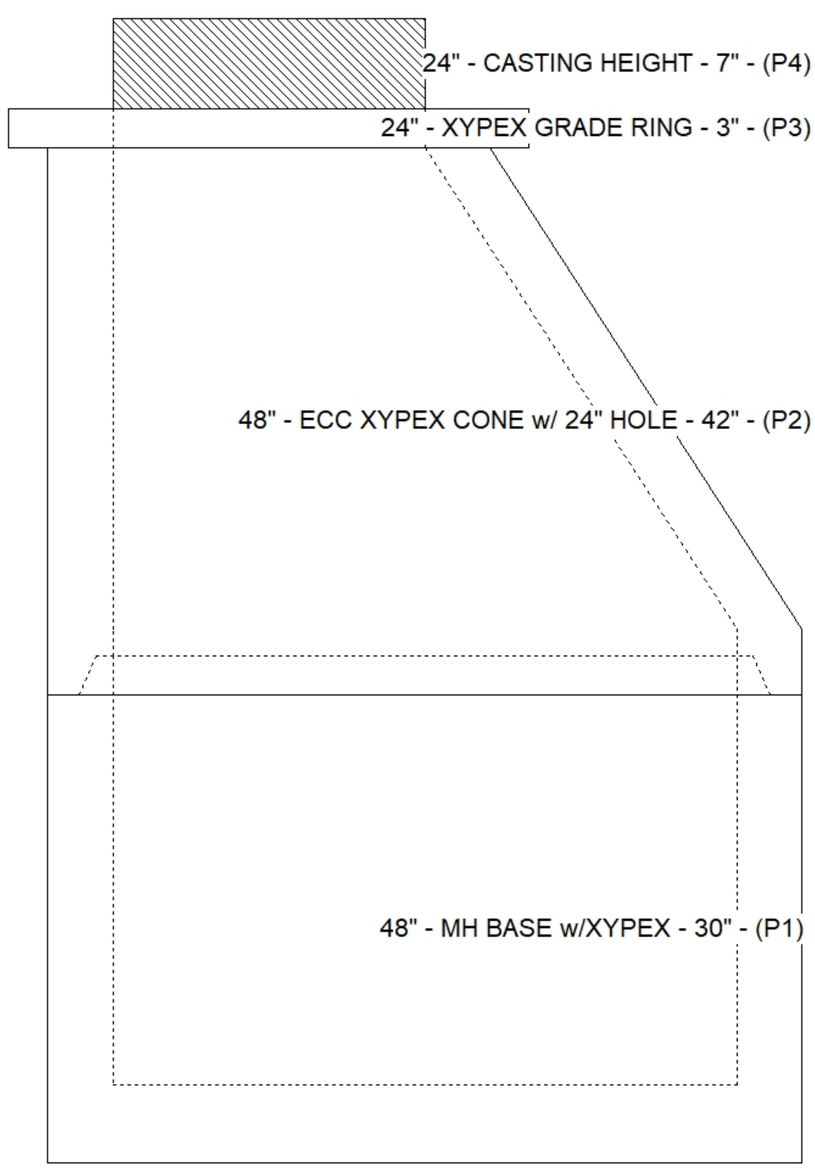

Default - Interior Dimensions

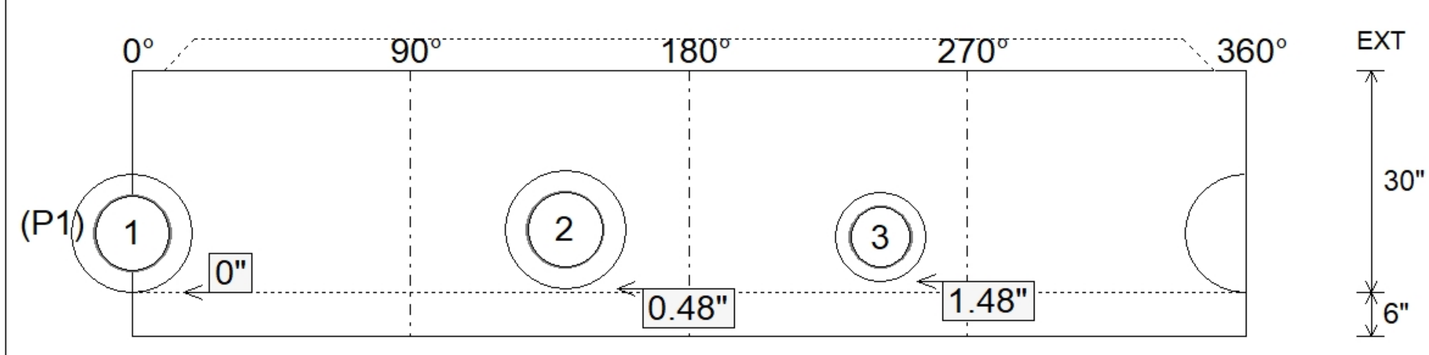

Submittal Drawing
7/30/2026 7:32:26 AM

SUBMITTAL
APPROVED BY: