Job Name: 26-2241 - Evansville Regional Airport Terminal Parking Expansion Job Location: Evansville, IN Contractor: Hahn Excavating, Inc.	Plant: 100 9/28/2026 12:55:30 PM	Tech: Jared - F PC: E. Bradley	

Structure ID: Str. 1 ST-MH

P1 MH048BAEVF **MH BASE EF Cust. Ht. 10"F (08"EF =74"OD) T/n**

P5) 30" x 30" - CASTING HEIGHT - 4"	0 lb
P4) 30" x 30" - GRADE RING F/F - 3"	218 lb
P3) 30" x 30" - GRADE RING F/F - 3"	218 lb
P2) 48" - MH FLAT TOP w/30"x30" Hole F/G - 12"	1350 lb
P1) 48" - MH BASE EF Cust. Ht. 10"F (08"EF =74"OD) T/n - 41"	6338 lb
1) CASTING - HOE 280 F/G	228 lb
1) 48" - Conseal CS-102 1.00"	0 lb
3) 30" x 30" - Conseal CS-102 1.00"	0 lb
1) Hole - 20	0 lb
3) MH Step ML-10-TDS-NCR - 10"	0 lb
Structure Total:	8351 lb

Structure Notes: .
1. PER ASTM C478 SPECIFICATIONS.
2. CONCRETE = 4,000 PSI AT 28 DAYS.
3. NO INVERT CHANNEL
4. CASTING BY ICAST (HOE 428 F/G)

.
REINFORCING PER ASTM A615 (GRADE 60).
- TOP SLAB (As .62) #5 BARS AT 6" C.C.E.W..
- RISER/WALLS (As .12)
- FLOOR (As .31) #5 BARS AT 12" C.C.E.W.

Rim: 394.68' Rim to Invert: 5.2' Slack: 0.7" Sump: 1.3" Step Position: 180°

Position	Elev	Angle	Ext. (cw)	Pipe	Pipe OD	Connector	Hole	Horz Size	Up (_)	Offset
Invert 1	389.48'	0°	0"	15" HDPE	17.6"	Hole 20	20"	20.629"	0"	0"
Invert 2										
Invert 3										
Invert 4										
Invert 5										
Invert 6										
Invert 7										
Invert 8										

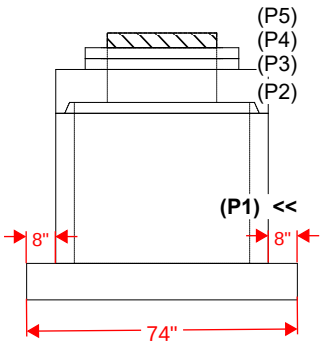

RIGHT-SIDE UP VIEW (int. dimensions)

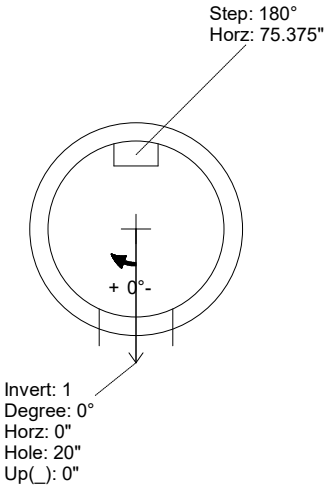

UPSIDE-DOWN VIEW (int. dimenions)

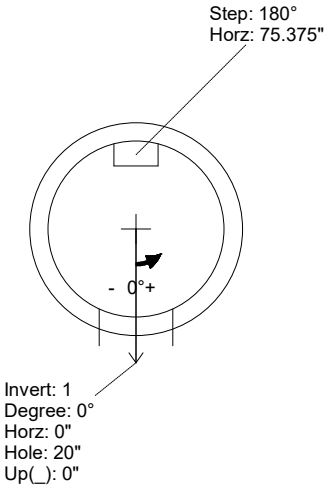

INSIDE WALL DIMENSIONS

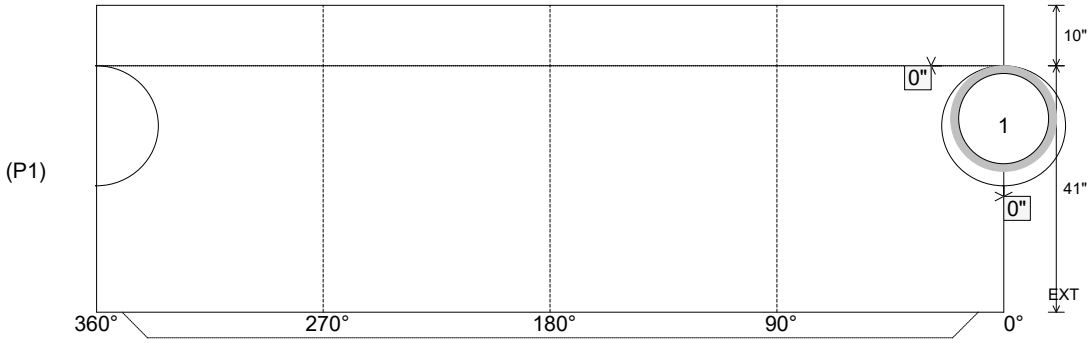

Coating (Int): Coating (Ext):	Seam Up: Tongue Seam Dn: n/a	Wall Thickness: 5" Floor Height: 10"	Height (Int): 41" Height (Ext): 51"	Weight (Net): 6338 lb Volume (Net): 1.62cu.yd