Job Name: 26-2217 Kroger COB Job Location: Bowling Green, KY Contractor: Stewart Richey	Plant: Beaver Dam 7/28/2026 9:26:34 AM	Tech: J. Coppage PC: T. Lewis	

Structure ID: QL4 VV

P2 BX090096-06LD08S BX FLAT LID 6"W w/36"x36" HATCH

P3) 36" x 36" - HATCH (CAST FLUSH) - 0"	100 lb
P2) 90" x 96" - BX FLAT LID 6"W w/36"x36" HATCH - 8"	6525 lb
P1) 90" x 96" - BOX BASE 6inW, 8inF, Variable Ht - 96"	26364 lb
1) This Structure Includes a Cast-in Item - 36" x 36" Hatch	0 lb
1) JOINT WRAP - 0.065"x6"x50' CONSEAL CS212	0 lb
1) JOINT WRAP PRIMER - CONSEAL CS-75 (1 gal.)	0 lb
1) SECONDARY POUR - WALLS	0 lb
1) HATCH (Alum.) - USF FAB. THS 36"x36"	266 lb
1) 90" x 96" - Conseal CS-102 1.00" (Double)	0 lb
3) PSX - 12M NYLO	24 lb
7) MH Step ML-10-TDS-NCR - 10"	0 lb

Structure Total:	33279 lb

Structure Notes: .
1. USF THS 36" X 36" HATCH BY ICAST.
2. HATCH TO BE CAST INTO THE TOP SLAB.
3. PER ASTM C913 SPECIFICATIONS.
4. CONCRETE = 4,000 PSI AT 28 DAYS.
5. REINFORCING PER ASTM A615 (GRADE 60).
- TOP SLAB (As .62) #5 BARS AT 6" C.C.E.W.
- WALLS (As .31) #5 BARS AT 8" C.C.E.W.
- FLOOR (As .31) #5 BARS AT 8" C.C.E.W.

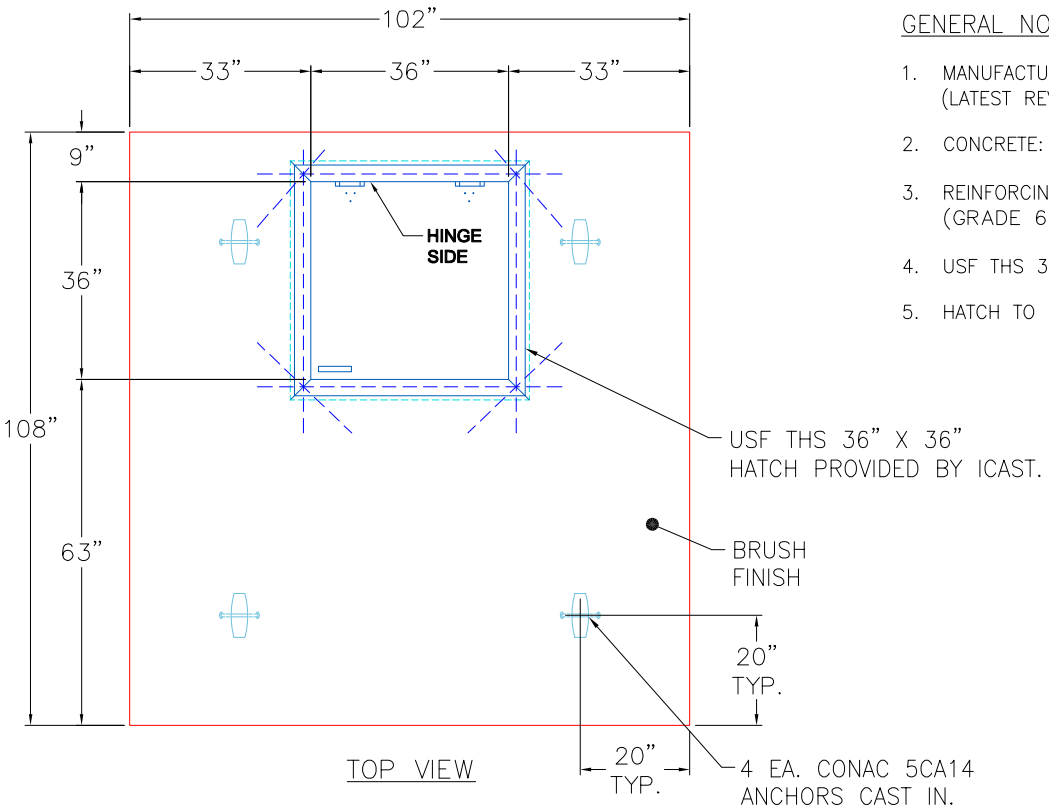

TOP VIEW

GENERAL NOTES:

1. MANUFACTURED TO ASTM C-913 (LATEST REVISION).
2. CONCRETE: 4,000 PSI AT 28 DAYS.
3. REINFORCING: #5 BAR @ 6" C.C.E.W. (GRADE 60).
4. USF THS 36" X 36" HATCH BY ICAST.
5. HATCH TO BE CAST IN TOP SLAB.

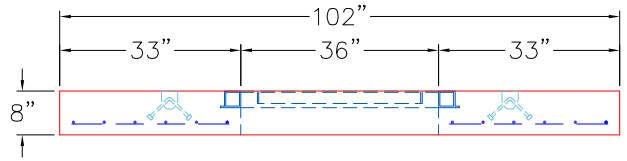

FRONT VIEW

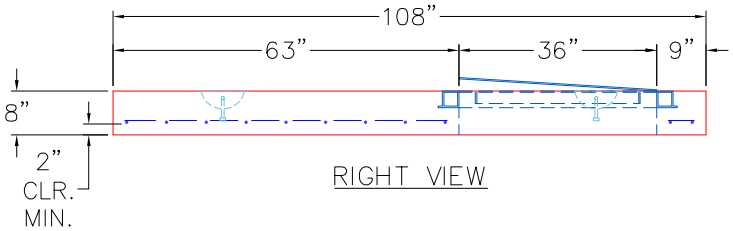

RIGHT VIEW

Coating (Int): Coating (Ext):	Seam Up: Flat Seam Dn: Flat	Wall Thickness: 6"	Height (Ext): 8"	Weight (Net): 6525 lb Volume (Net): 1.67cu.yd