Job Name: 26-2212 - CDTI Building 1 Job Location: Charlestown, IN Contractor: Dan Cristiani Excavating Co. Inc.	Plant: Beaver Dam 8/18/2026 12:38:42 PM	Tech: J. Coppage PC: E. Bradley	

Structure ID: 210 ST-MH

P1 MH072BAVF **MH BASE Custom Ht**

P5) 24" x 36" - CASTING HEIGHT - 7"	0 lb
P4) 48" - MH FLAT TOP w/24"x36" Hole - 12"	1300 lb
P3) 48" - MH RISER Custom Ht - 57"	3785 lb
P2) 72" - MH Transition Slab 48" Hole - 15"	3864 lb
P1) 72" - MH BASE Custom Ht - 84"	13024 lb
1) 72" - Conseal CS-102 1.00"	0 lb
2) 48" - Conseal CS-102 1.00"	0 lb
1) 24" x 36" - Conseal CS-102 1.00"	0 lb
1) Hole - 58	0 lb
1) Hole - 24	0 lb
1) Hole - 52	0 lb
13) MH Step ML-10-TDS-NCR - 10"	0 lb

Structure Total:	21973 lb

Rim: 607.73' Rim to Invert: 14.47' Slack: 1.59" Sump: 2.95" Step Position: 270°

Structure Notes: .
INDOT STATE PROJECT
1. (GREEN HAT CB2436-7-F PROVIDED BY OTHERS)
2. INDOT MH TYPE K / ASTM C478 SPEC'S.
3. CONCRETE = 4,000 PSI AT 28 DAYS.
4. NO INVERT CHANNEL.
5. REINFORCING PER ASTM A615 (GRADE 60).
- TOP SLAB (As .62) #5 BARS AT 6" C.C.E.W..
- RISER/WALLS (As .12)
- FLOOR (As .62) #5 BARS AT 6" C.C.E.W.

Position	Elev	Angle	Ext. (cw)	Pipe	Pipe OD	Connector	Hole	Horz Size	Up (_)	Offset
Invert 1	593.26'	0°	0"	48" HDPE	53.5"	Hole 58	58"	67.436"	0"	0"
Invert 2										
Invert 3	593.36'	180°	135.088"	42" HDPE	47.7"	Hole 52	52"	58.105"	1"	0"
Invert 4										
Invert 5										
Invert 6										
Invert 7										
Invert 8										

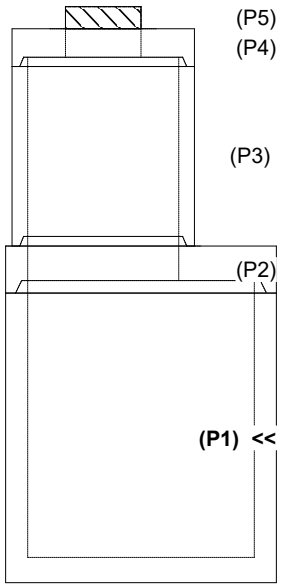

RIGHT-SIDE UP VIEW (int. dimensions)

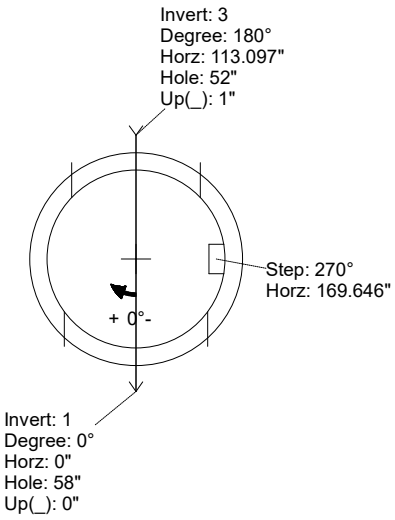

UPSIDE-DOWN VIEW (int. dimenions)

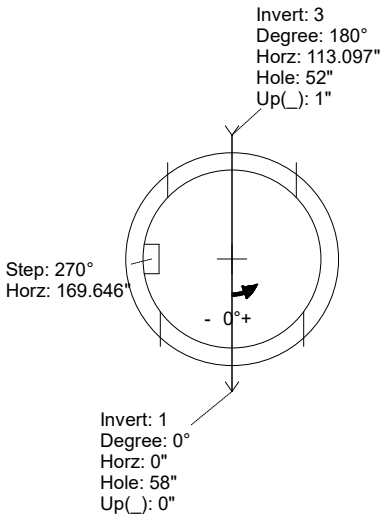

INSIDE WALL DIMENSIONS

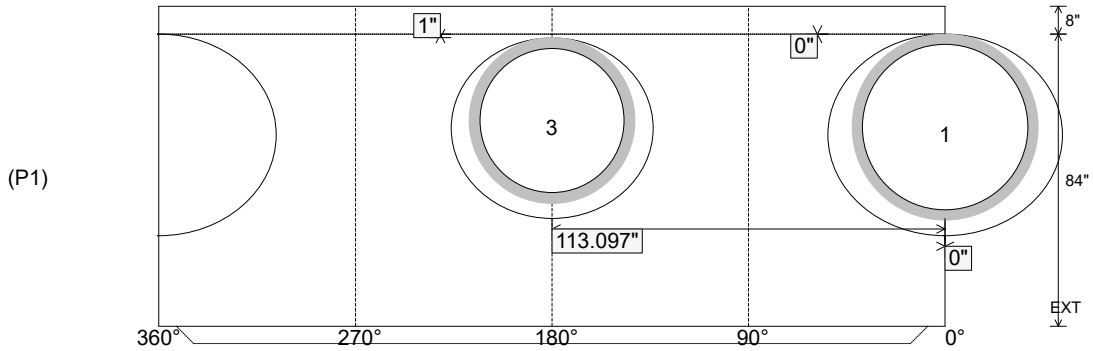

Coating (Int): Coating (Ext):	Seam Up: Tongue Seam Dn: n/a	Wall Thickness: 7" Floor Height: 8"	Height (Int): 84" Height (Ext): 92"	Weight (Net): 13024 lb Volume (Net): 3.33cu.yd