Job Name: 26-2212 - CDTI Building 1 Job Location: Charlestown, IN Contractor: Dan Cristiani Excavating Co. Inc.	Plant: Beaver Dam 8/18/2026 12:38:38 PM	Tech: J. Coppage PC: E. Bradley	

Structure ID: 205 ST-MH

P1 MH072BAVF **MH BASE Custom Ht**

P3) 24" x 36" - CASTING HEIGHT - 6"	0 lb
P2) 72" - MH FLAT TOP w/24"x36" Hole - 15"	4530 lb
P1) 72" - MH BASE Custom Ht - 78"	12537 lb
1) 72" - Conseal CS-102 1.00"	0 lb
1) 24" x 36" - Conseal CS-102 1.00"	0 lb
2) Hole - 52	0 lb
6) MH Step ML-10-TDS-NCR - 10"	0 lb
Structure Total:	17066 lb

Structure Notes: .
INDOT STATE PROJECT
1. (GREEN HAT CI3158-F PROVIDED BY OTHERS)
2. INDOT MH TYPE K / ASTM C478 SPEC'S.
3. CONCRETE = 4,000 PSI AT 28 DAYS.
4. NO INVERT CHANNEL.
5. REINFORCING PER ASTM A615 (GRADE 60).
- TOP SLAB (As .62) #5 BARS AT 6" C.C.E.W..
- RISER/WALLS (As .12)
- FLOOR (As .62) #5 BARS AT 6" C.C.E.W.

Rim: 606.39' Rim to Invert: 8.19' Slack: 2.43" Sump: 3.15" Step Position: 90°

Position	Elev	Angle	Ext. (cw)	Pipe	Pipe OD	Connector	Hole	Horz Size	Up (_)	Offset
Invert 1	598.2'	0°	0"	42" HDPE	47.7"	Hole 52	52"	58.105"	0"	0"
Invert 2	598.3'	180°	135.088"	42" HDPE	47.7"	Hole 52	52"	58.105"	1.2"	0"
Invert 3										
Invert 4										
Invert 5										
Invert 6										
Invert 7										
Invert 8										

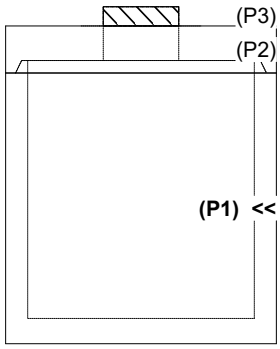

RIGHT-SIDE UP VIEW (int. dimensions)

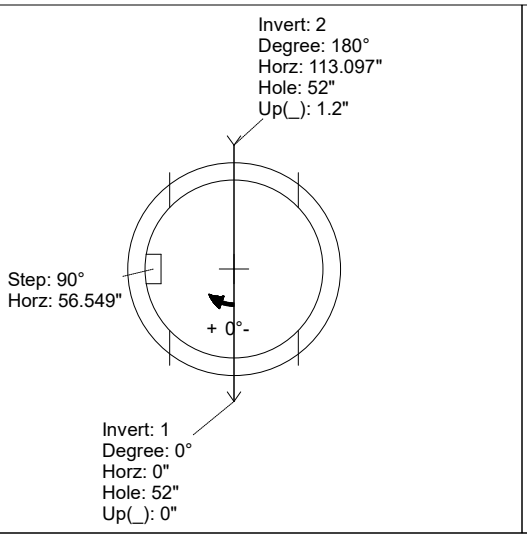

UPSIDE-DOWN VIEW (int. dimenions)

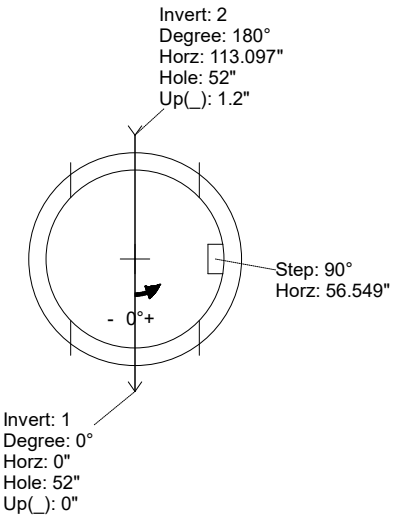

INSIDE WALL DIMENSIONS

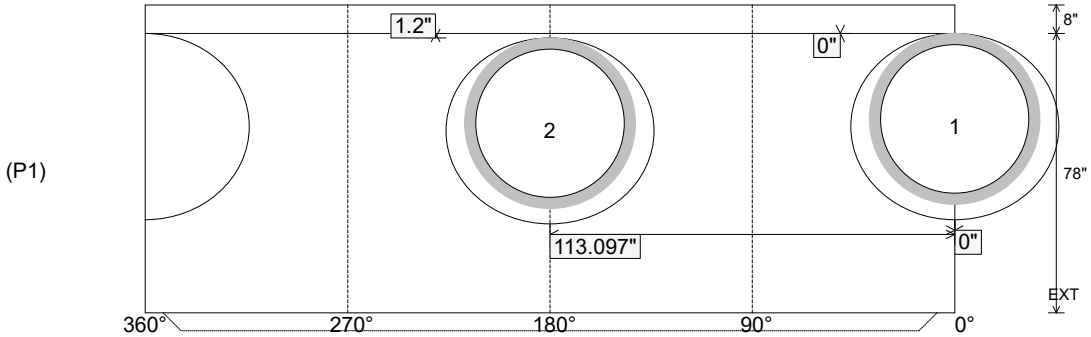

Coating (Int): Coating (Ext):	Seam Up: Tongue Seam Dn: n/a	Wall Thickness: 7" Floor Height: 8"	Height (Int): 78" Height (Ext): 86"	Weight (Net): 12537 lb Volume (Net): 3.2cu.yd