Job Name: 26-2212 - CDTI Building 1 Job Location: Charlestown, IN Contractor: Dan Cristiani Excavating Co. Inc.	Plant: Beaver Dam 8/18/2026 12:38:33 PM	Tech: J. Coppage PC: E. Bradley	

Structure ID: 112 INJ10

P1 BX2436-06W08F-BAVF BOX BASE 6inW, 8inF, Variable Ht

P2) 24" x 36" - CASTING HEIGHT - 6"	0 lb
P1) 24" x 36" - BOX BASE 6inW, 8inF, Variable Ht - 36"	3579 lb
1) 24" x 36" - Conseal CS-102 1.00"	0 lb
1) Hole - 22	0 lb

Structure Total:	3579 lb

Structure Notes: .
INDOT STATE PROJECT
1. (GREEN HAT CI3158-F PROVIDED BY OTHERS)
2. INDOT INLET TYPE J / ASTM C913 SPEC'S.
3. CONCRETE = 4,000 PSI AT 28 DAYS.
4. NO INVERT CHANNEL.
5. REINFORCING PER ASTM A615 (GRADE 60).
- WALLS (As .31) #5 BARS AT 12" C.C.E.W.
- FLOOR (As .31) #5 BARS AT 12" C.C.E.W.

Rim: 607.91' Rim to Invert: 3.61' Slack: 2.62' Sump: 1.3' Step Position:

Position	Elev	Angle	Ext. (cw)	Pipe	Pipe OD	Connector	Hole	Horz Size	Up (_)	Offset
Invert 1	604.3'	90°	24"	15" HDPE	17.6"	Hole 22	22"	22"	0"	0"
Invert 2										
Invert 3										
Invert 4										
Invert 5										
Invert 6										
Invert 7										
Invert 8										

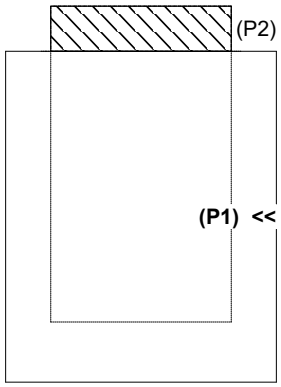

RIGHT-SIDE UP VIEW (int. dimensions)

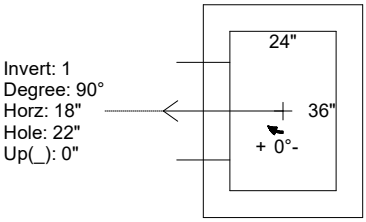

UPSIDE-DOWN VIEW (int. dimenions)

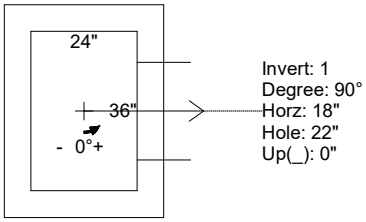

INSIDE WALL DIMENSIONS

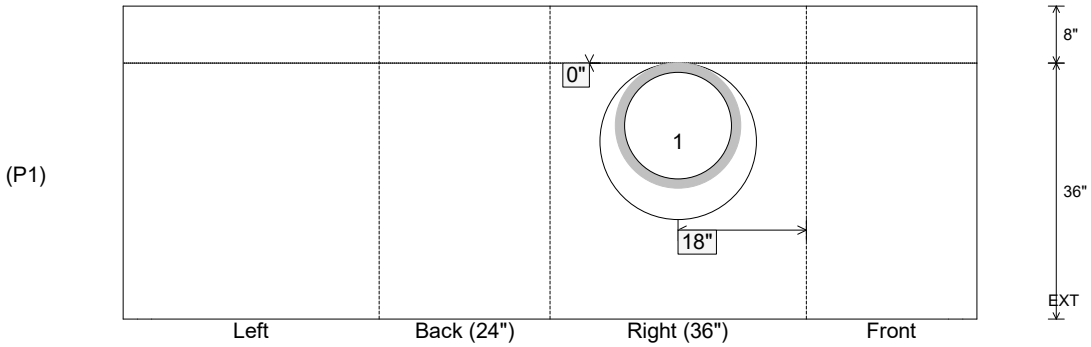

Coating (Int): Coating (Ext):	Seam Up: Flat Seam Dn: n/a	Wall Thickness: 6" Floor Height: 8"	Height (Int): 36" Height (Ext): 44"	Weight (Net): 3579 lb Volume (Net): 0.91cu.yd