Job Name: 26-2212 - CDTI Building 1 Job Location: Charlestown, IN Contractor: Dan Cristiani Excavating Co. Inc.	Plant: Beaver Dam 8/18/2026 12:40:25 PM	Tech: J. Coppage PC: E. Bradley	

Structure ID: 104 ST-MH

P2 MH060LD08-24X36RECT MH FLAT TOP w/24"x36" Hole

P3) 24" x 36" - CASTING HEIGHT - 6"	0 lb
P2) 60" - MH FLAT TOP w/24"x36" Hole - 8"	2153 lb
P1) 60" - MH BASE Custom Ht - 42"	5779 lb
1) 60" - Conseal CS-102 1.00"	0 lb
1) 24" x 36" - Conseal CS-102 1.00"	0 lb
1) Hole - 40	0 lb
1) Hole - 24	0 lb
1) Hole - 32	0 lb
3) MH Step ML-10-TDS-NCR - 10"	0 lb
Structure Total:	7933 lb

Structure Notes: .
INDOT STATE PROJECT
1. (GREEN HAT CI3158-F PROVIDED BY OTHERS)
2. INDOT MH TYPE C / ASTM C478 SPEC'S.
3. CONCRETE = 4,000 PSI AT 28 DAYS.
4. NO INVERT CHANNEL.
5. REINFORCING PER ASTM A615 (GRADE 60).
- TOP SLAB (As .62) #5 BARS AT 6" C.C.E.W..
- RISER/WALLS (As .12)
- FLOOR (As .62) #5 BARS AT 6" C.C.E.W.

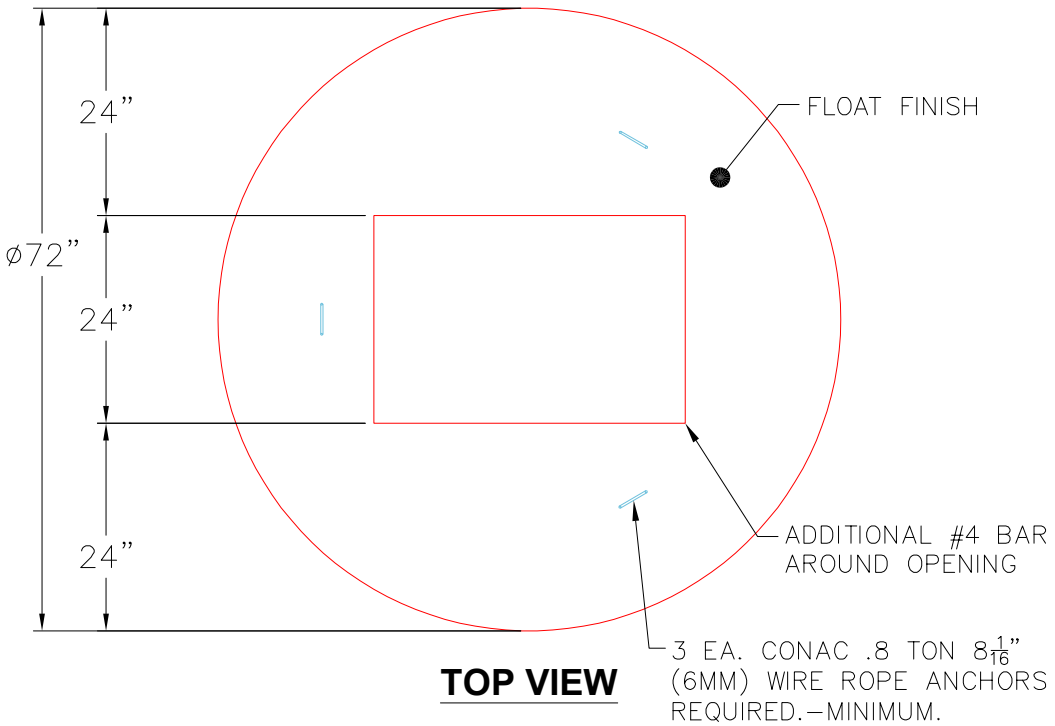

TOP VIEW

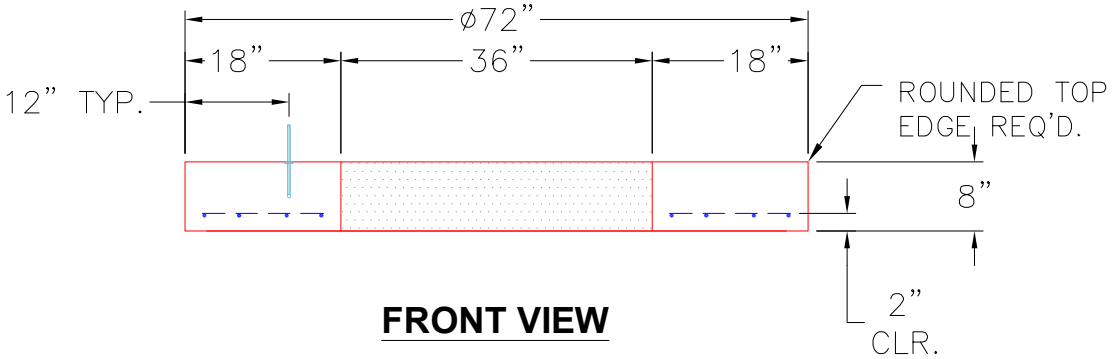

FRONT VIEW

NOTES:
1. MANUFACTURED TO ASTM C–478 (LATEST REVISION).
2. CONCRETE: 4,000 PSI AT 28 DAYS.
3. REINFORCING: #4 BAR @ 9" O.C. E.W. (GRADE 60).

Coating (Int): Coating (Ext):	Seam Up: Flat Seam Dn: Flat	Wall Thickness: 6"	Height (Ext): 8"	Weight (Net): 2153 lb Volume (Net): 0.55cu.yd