Job Name: 26-2212 - CDTI Building 1
Job Location: Charlestown, IN
Contractor: Dan Cristiani Excavating Co. Inc.

PC: E. Bradley
TECH: J. Coppage
Plant: Beaver Dam

Structure ID: **102 INM10**

Spec: INDOT	Rim: 610.87'	Sump: 1.3"	Floor (Bot): 606.685'
Type: INLET TYPE M	Invert: 607.46'	Floor (Top): 607.352'	Overall Height: 4'
Size: 24" x 36"	Rim to Invert: 3.41'	Floor Height: 8"	Slack: 2.22"

Structure Notes: .
INDOT STATE PROJECT
1. (GREEN HAT CI3158-F PROVIDED BY OTHERS)
2. INDOT INLET TYPE M / ASTM C913 SPEC'S.
3. CONCRETE = 4,000 PSI AT 28 DAYS.
4. NO INVERT CHANNEL.
5. REINFORCING PER ASTM A615 (GRADE 60).
- WALLS (As .31) #5 BARS AT 12" C.C.E.W.
- FLOOR (As .31) #5 BARS AT 12" C.C.E.W.

STRUCTURE SUMMARY:

P2) 24" x 36" - CASTING HEIGHT - 6"	0 lb
P1) 24" x 36" - BOX BASE 6inW, 8inF, Variable Ht - 34"	3221 lb
1) 24" x 36" - Conseal CS-102 1.00"	0 lb
2) Hole - 22	0 lb
Structure Total:	3221 lb

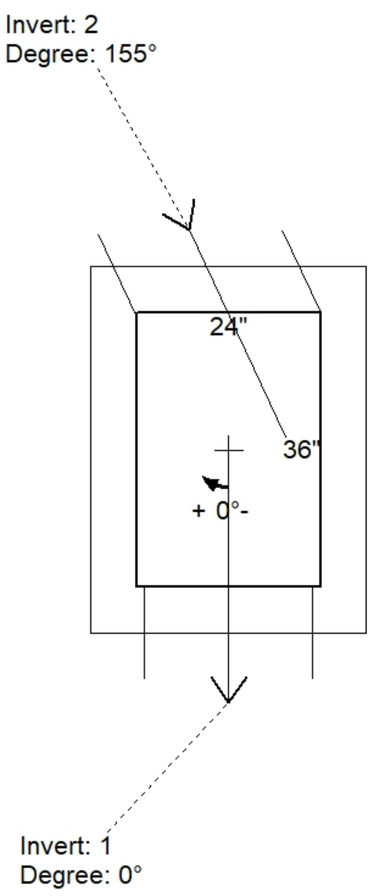

Position	Elev	Angle	Pipe	Pipe OD	Hole	Connector	Up (_)	Ref
Rim	610.87'							
Reducer								
Invert 1	607.46'	0°	15" HDPE	17.6"	22"	Hole 22	0"	P1
Invert 2	607.56'	155°	15" HDPE	17.6"	22"	Hole 22	1.2"	P1
Invert 3								
Invert 4								
Invert 5								
Invert 6								
Invert 7								
Invert 8								

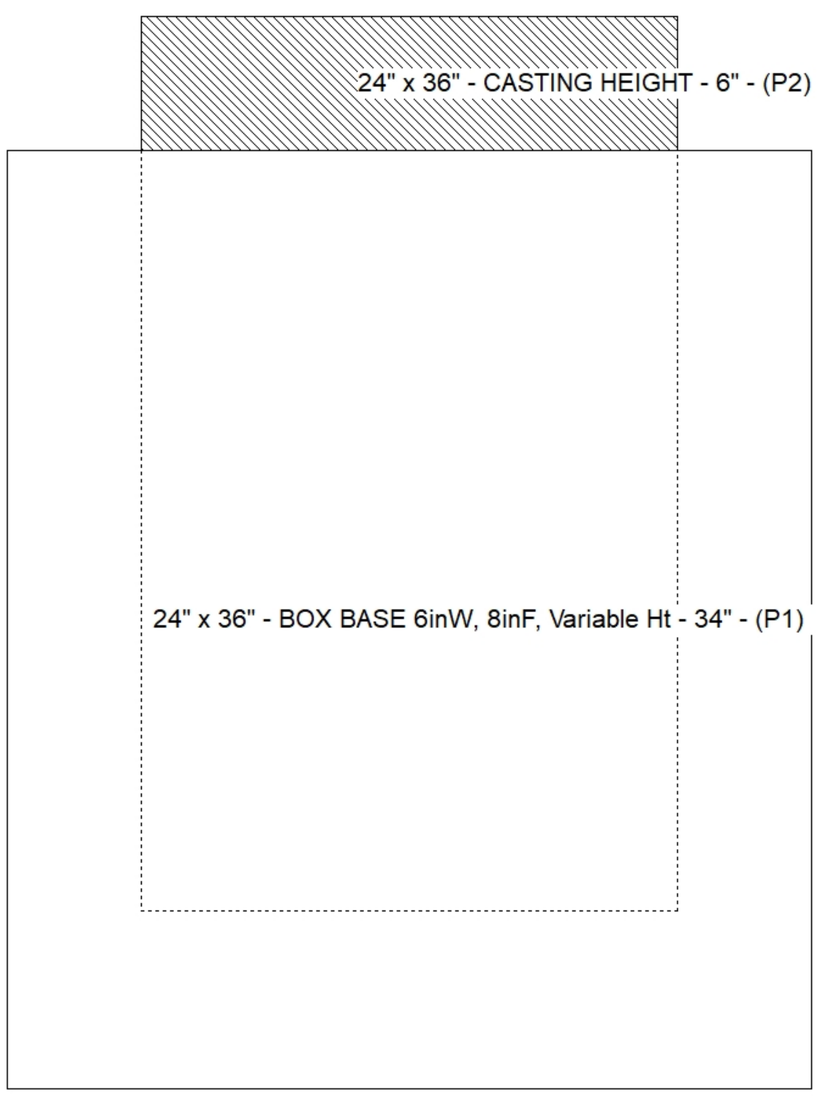

Default - Interior Dimensions

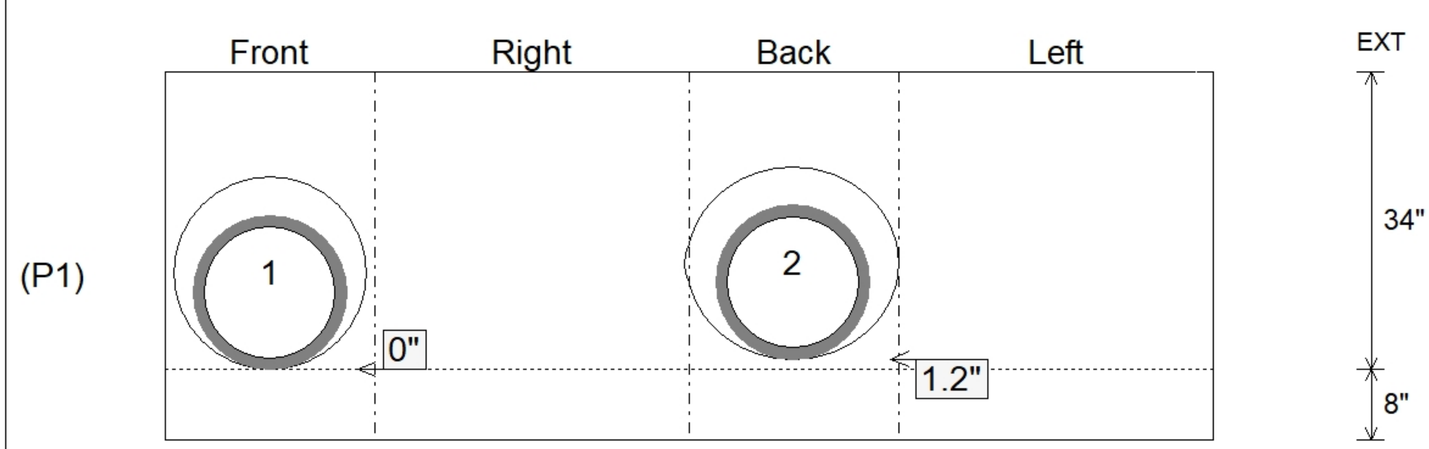

Submittal Drawing
8/20/2026 8:58:56 AM

SUBMITTAL
APPROVED BY: