Job Name: 26-2171 - Lake Malone Campground Multi Park West
Job Location: Lewisburg, KY
Contractor: Sensabaugh Design & Construction, LLC

PC: M. Sullivan
TECH: Jared - F
Plant: 100

Structure ID: **SSMH-E1**

Spec: Sanitary	Rim: 567.82'	Sump: 8"	Floor (Bot): 558.283'
Type: SAN.MH (OPEN BTM)	Invert: 558.95'	Floor (Top): 558.283'	Overall Height: 9.417'
Size: 48"	Rim to Invert: 8.87'	Floor Height: 0"	Slack: 1.44"

Structure Notes: .
1. PER ASTM C478 SPECIFICATIONS.
2. CONCRETE = 4,000 PSI AT 28 DAYS.
3. CASTING SUPPLIED BY ICAST (HOE MC-315 F/C "SANITARY").
.
REINFORCING PER ASTM A615 (GRADE 60).
- CONE (As .12)
- RISER/WALLS (As .12)

STRUCTURE SUMMARY:

P4) 24" - CASTING HEIGHT - 7"	0 lb
P3) 48" - ECC CONE w/ 24" HOLE - 36"	3000 lb
P2) 48" - MH RISER Custom Ht - 70"	4637 lb
P1) 48" - P.I.P. BY OTHERS - BTM SLAB - 0"	0 lb
1) JOINT WRAP - 0.065"x6"x50' CONSEAL CS212	0 lb
1) JOINT WRAP PRIMER - CONSEAL CS-75 (1 gal.)	0 lb
1) 48" - MH INVERT CHANNEL - FULL HEIGHT	1440 lb
1) CASTING - HOE MC-315 F/C Sanitary	258 lb
2) 48" - Conseal CS-102 1.00" (Double)	0 lb
1) 24" - Conseal CS-102 1.00" (Double)	0 lb
2) DOGHOUSE - 12"x18"	0 lb
1) PSX - 8QRS-S NYLO	6 lb
1) PSX - 12-06 NYLO	8 lb
9) MH Step ML-10-TDS-NCR - 10"	0 lb
Structure Total:	9350 lb

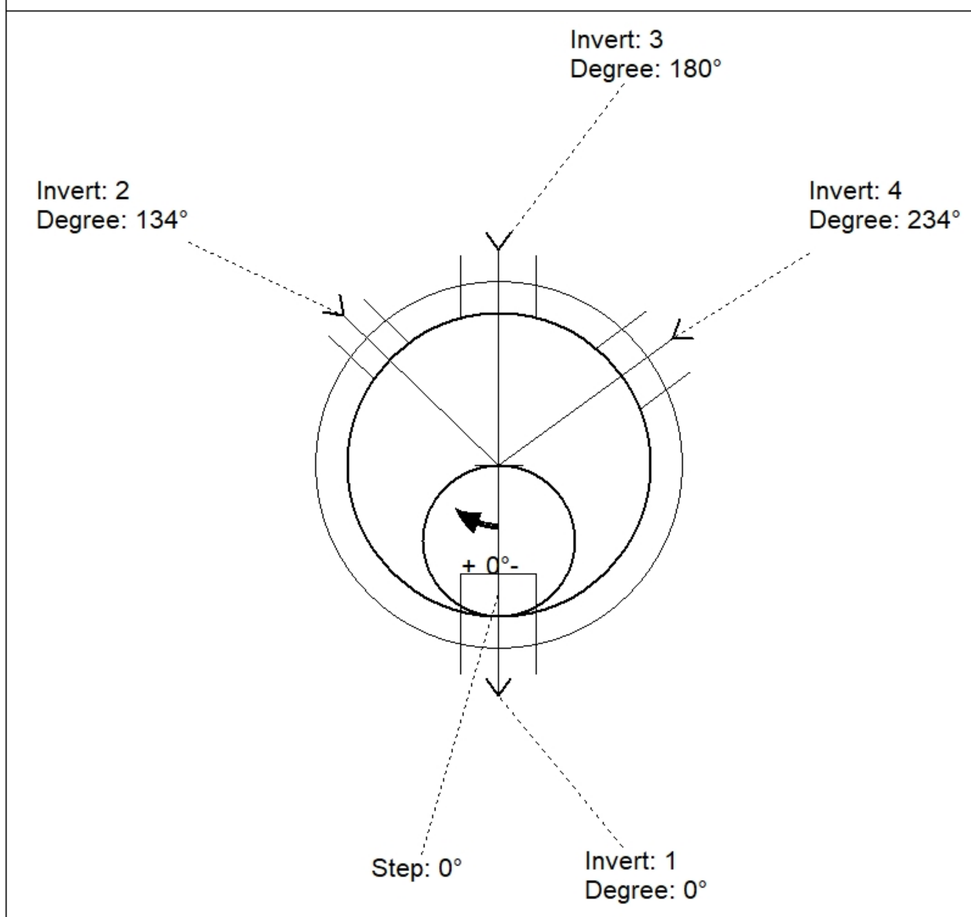

Position	Elev	Angle	Pipe	Pipe OD	Hole	Connector	Up (_)	Ref
Rim	567.82'							
Reducer								
Invert 1	558.95'	0°	6" PVC SDR35	6.25"	12" x 18"	DOGHOUSE 12"x18"	2"	P2
Invert 2	559'	134°	4" PVC SCH40	4.5"	8"	PSX 8QRS-S NYLO	6.599"	P2
Invert 3	558.95'	180°	6" PVC SDR35	6.25"	12" x 18"	DOGHOUSE 12"x18"	2"	P2
Invert 4	559'	234°	6" PVC SDR35	6.25"	12"	PSX 12-06 NYLO	5.6"	P2
Invert 5								
Invert 6								
Invert 7								
Invert 8								

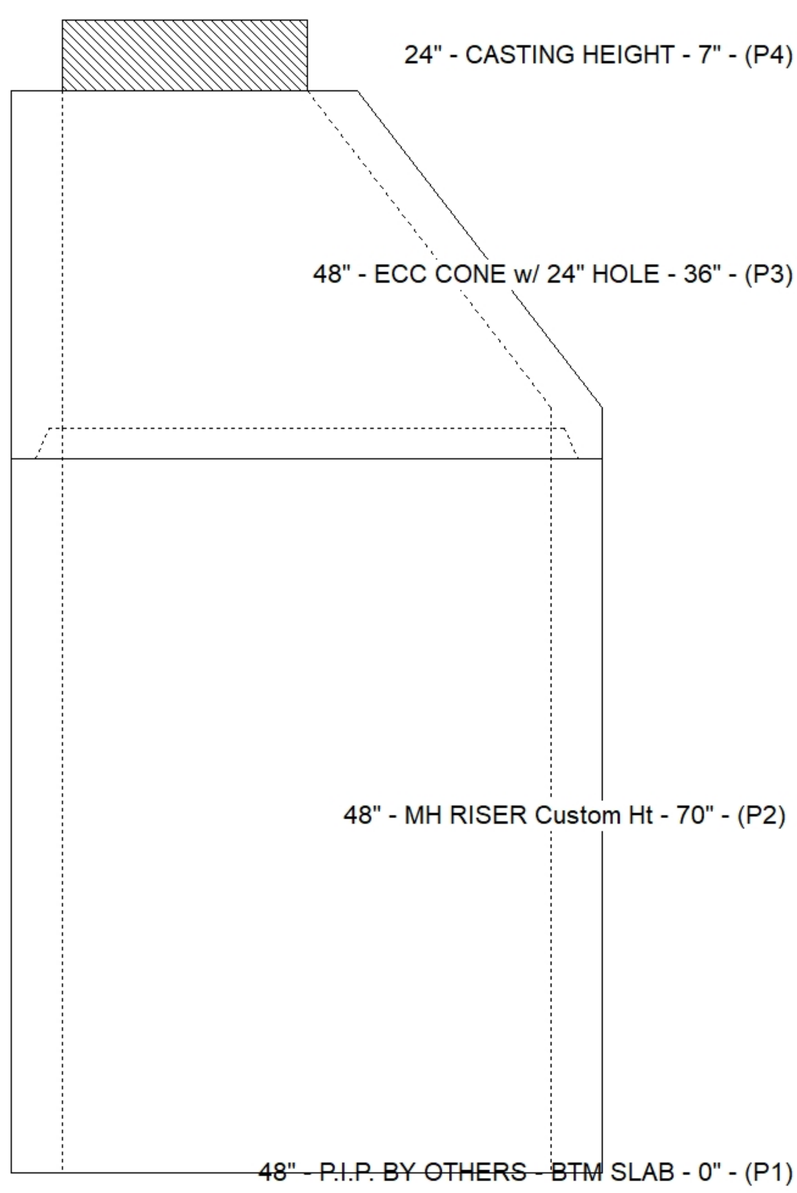

Default - Interior Dimensions

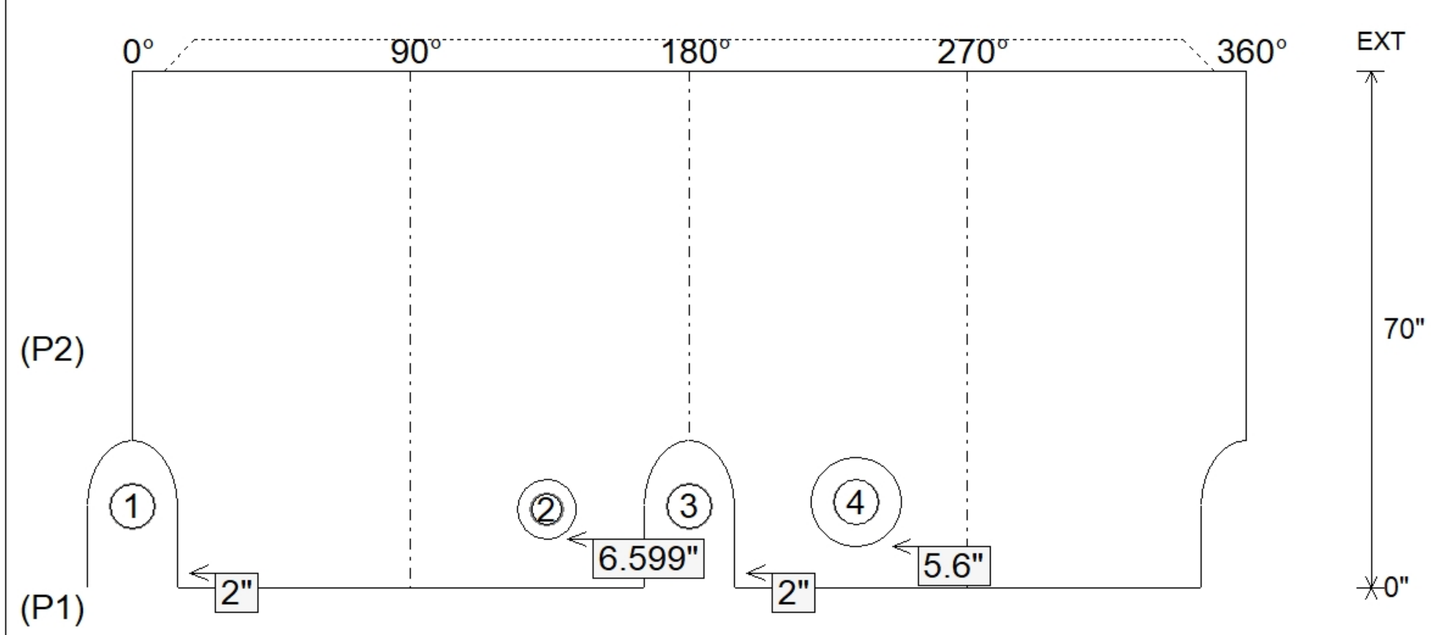

Submittal Drawing
6/19/2026 8:30:37 AM

SUBMITTAL
APPROVED BY: