| | | | |
|---|---|---|---|
| Job Name: 26-2171 - Lake Malone Campground Multi Park West<br>Job Location: Lewisburg, KY<br>Contractor: Sensabaugh Design & Construction, LLC | Plant: 100<br>6/16/2026 10:48:07 AM | Tech: Jared - F<br>PC: M. Sullivan | |

## Structure ID: CB-A2

**P1 BX2424-08BA36 BOX BASE 8inW, 8inF F/n**

| | |
|---|---|
| P2) 24" x 24" - CASTING HEIGHT - 4" | 0 lb |
| P1) 24" x 24" - BOX BASE 8inW, 8inF F/n - 36" | 3820 lb |
| 1) CASTING - HOE 280T F/G | 182 lb |
| 1) 24" x 24" - Conseal CS-102 1.00" | 0 lb |
| 2) Hole - 16 | 0 lb |
| 1) Hole - 10 | 0 lb |
| Structure Total: | 4002 lb |

Structure Notes: .
1. PER ASTM C913 SPECIFICATIONS.
2. CONCRETE = 4,000 PSI AT 28 DAYS.
3. NO STEPS AND NO INVERT CHANNEL.
4. CASTING BY ICAST (HOE 280T F/G).

.
REINFORCING PER ASTM A615 (GRADE 60).
- WALLS (As .12) #5 BARS AT 12" C.C.E.W.
- FLOOR (As .12) #5 BARS AT 12" C.C.E.W.

Rim: 570.1' Rim to Invert: 3.4' Slack: 0.8" Sump: 0" Step Position:

| Position | Elev | Angle | Ext. (cw) | Pipe | Pipe OD | Connector | Hole | Horz Size | Up (_) | Offset |
|---|---|---|---|---|---|---|---|---|---|---|
| Invert 1 | 566.7' | 330° | 15.375" | 12" HDPE | 14.5" | Hole 16 | 16" | 18.475" | -1.25" | 6" |
| Invert 2 | 566.7' | 180° | 20" | 12" HDPE | 14.5" | Hole 16 | 16" | 16" | -1.25" | 0" |
| Invert 3 | 567.7' | 250° | 15.875" | 6" HDPE | 6.9" | Hole 10 | 10" | 10.642" | 11.5" | 3" |
| Invert 4 | | | | | | | | | | |
| Invert 5 | | | | | | | | | | |
| Invert 6 | | | | | | | | | | |
| Invert 7 | | | | | | | | | | |
| Invert 8 | | | | | | | | | | |

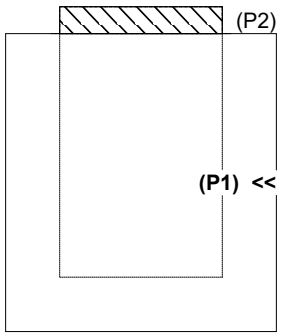


RIGHT-SIDE UP VIEW (int. dimensions)

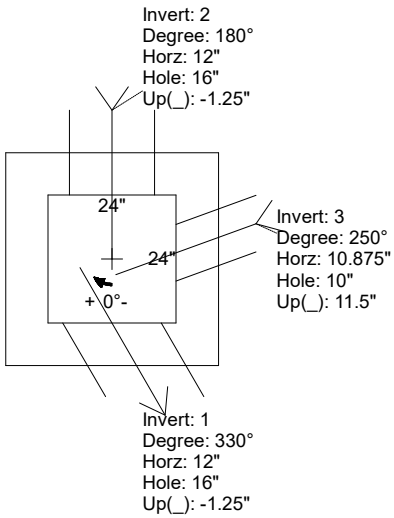


UPSIDE-DOWN VIEW (int. dimenions)

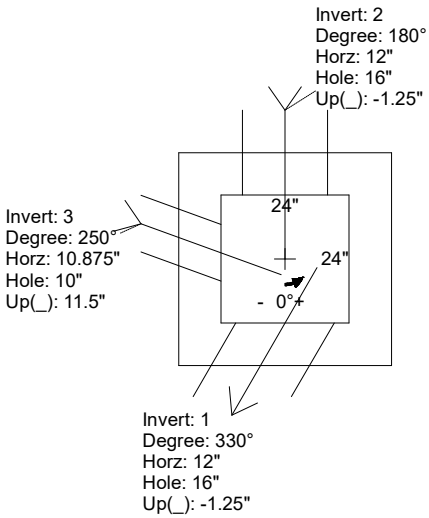


INSIDE WALL DIMENSIONS

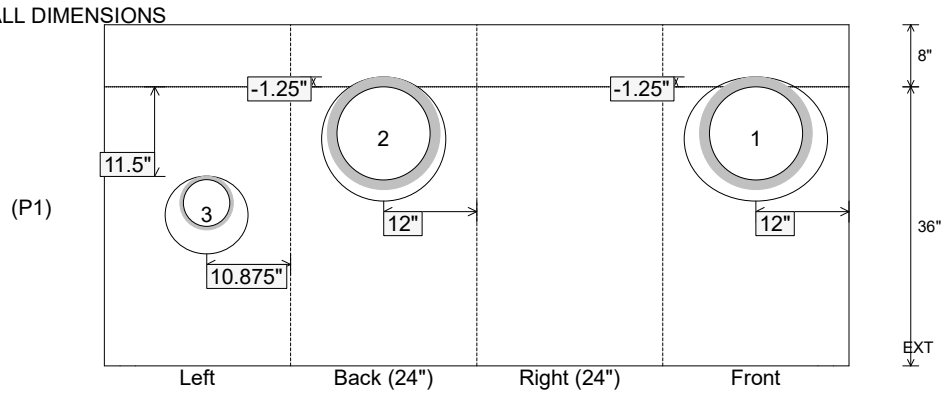


| | | | | |
|---|---|---|---|---|
| Coating (Int):<br>Coating (Ext): | Seam Up: Flat<br>Seam Dn: n/a | Wall Thickness: 8"<br>Floor Height: 8" | Height (Int): 36"<br>Height (Ext): 44" | Weight (Net): 3820 lb<br>Volume (Net): 0.98cu.yd |