Job Name: 26-2117 - The Preserve at Priest Lake Job Location: Nashville, TN Contractor: Bear Construction LLC	Plant: 100 8/27/2026 2:55:50 PM	Tech: J. Horsley PC: T. Ryan	

Structure ID: 4 SS-MH

P2 MH048RS60CDARED MH RISER w/ConBlock-CDA Red T/G

P5) 24" - CASTING HEIGHT - 7"	0 lb
P4) 24" - GRADE RING w/ConBlock-CDA Red F/F - 3"	202 lb
P3) 48" - CON CONE w/24" HOLE, w/ConBlock-CDA Red F/G - 36"	2251 lb
P2) 48" - MH RISER w/ConBlock-CDA Red T/G - 60"	4192 lb
P1) 48" - MH BASE w/ConBlock-CDA Red T/n - 24"	2911 lb
1) JOINT WRAP - 0.065"x6"x50' CONSEAL CS212	0 lb
1) JOINT WRAP PRIMER - CONSEAL CS-75 (1 gal.)	0 lb
1) 48" - MH INVERT CHANNEL w/ConBlock-CDA Red - FULL HEIGHT	1440 lb
1) CASTING - JBS 1150 F/C SANITARY	250 lb
2) 48" - Conseal CS-102 1.00" (Double)	0 lb
2) PSX - 12-08 NYLO	16 lb
10) MH Step ML-10-TDS-NCR - 10"	0 lb
Structure Total:	11262 lb

Structure Notes: .
1. PER ASTM C478 SPECIFICATIONS.
2. CONCRETE = 4,000 PSI AT 28 DAYS.
3. ADMIXTURE = CONBLOCK CDA RED.
4. CASTING BY ICAST (JBS 1150 F/C)

.
REINFORCING PER ASTM A615 (GRADE 60).
- CONE (As .12)
- RISER/WALLS (As .12)
- FLOOR (As .31) #5 BARS AT 12" C.C.E.W.

Rim: 527.94' Rim to Invert: 10.74' Slack: 0.884" Sump: 2.004" Step Position: 248°

Position	Elev	Angle	Ext. (cw)	Pipe	Pipe OD	Connector	Hole	Horz Size	Up (_)	Offset
Invert 1										
Invert 2										
Invert 3										
Invert 4										
Invert 5										
Invert 6										
Invert 7										
Invert 8										

RIGHT-SIDE UP VIEW (int. dimensions)

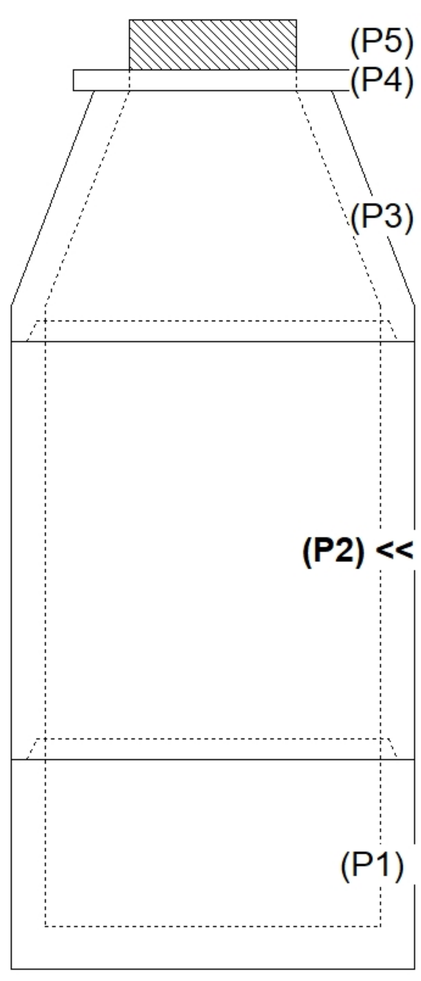

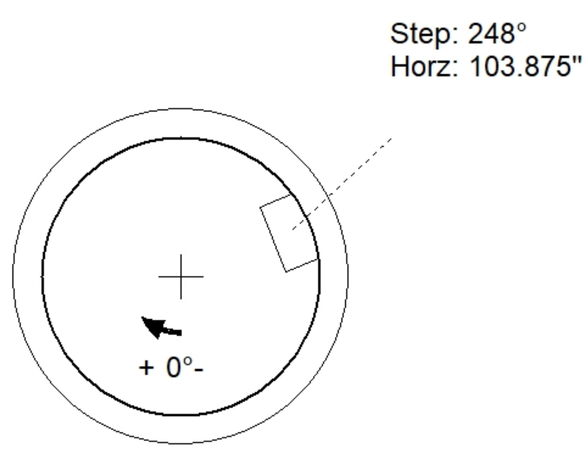

INSIDE WALL DIMENSIONS

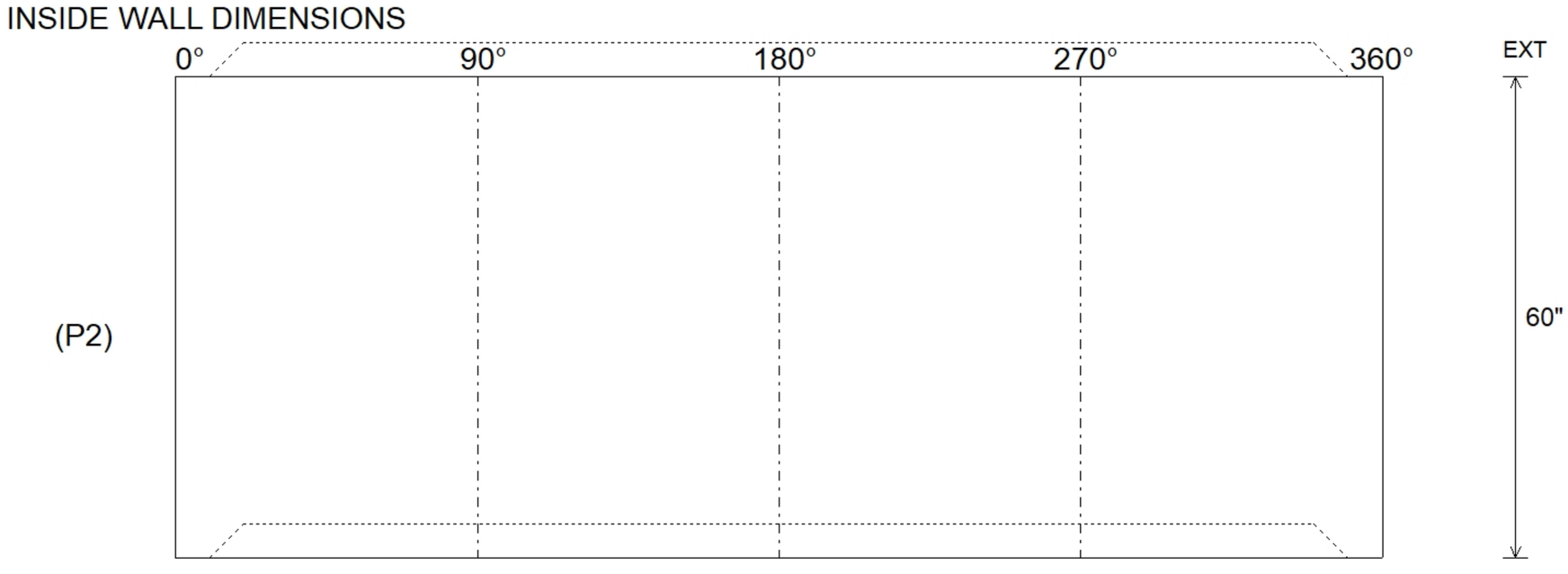

Coating (Int): Coating (Ext):	Seam Up: Tongue Seam Dn: Groove	Wall Thickness: 5" Floor Height: 0"	Height (Int): 60" Height (Ext): 60"	Weight (Net): 4192 lb Volume (Net): 1.07cu.yd