Job Name: 26-2104 - Jeffersonville High School Parking Lot
Job Location: Jeffersonville, IN
Contractor: Mac Construction & Excavating, Inc.

PC: T. Lewis
TECH: Jared - A
Plant: 100

Structure ID: **7 ST-CI**

Spec: Storm	Rim: 483.85'	Sump: 2"	Floor (Bot): 480.353'
Type: STM.MH	Invert: 481.02'	Floor (Top): 480.853'	Overall Height: 3.417'
Size: 48"	Rim to Invert: 2.83'	Floor Height: 6"	Slack: 0.96"

Structure Notes:
1. PER ASTM C-478 SPECIFICATIONS
2. CONCRETE: 4,000 PSI AT 28 DAYS
3. REINFORCEMENT:
   - FLAT LID: #4 BAR @ 10" C.C. E.W. (GRADE 60)
   - BASE: PER ASTM A615
4. STORM INVERT BY OTHERS
5. NO STEPS
6. HOE 525 FRAME, GRATE, & CURB HOOD SUPPLIED BY OTHERS

STRUCTURE SUMMARY:

P3) 24" x 36" - CASTING HEIGHT - 6"	0 lb
P2) 48" - MH FLAT TOP w/24"x36" Hole F/F - 7"	1044 lb
P1) 48" - MH BASE Custom Ht F/n - 22"	2475 lb
1) 48" - Conseal CS-102 1.00"	0 lb
1) 24" x 36" - Conseal CS-102 1.00"	0 lb
3) Hole - 18	0 lb
Structure Total:	3519 lb

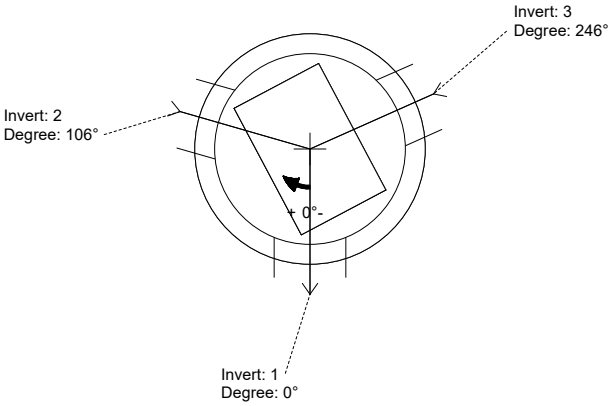

Position	Elev	Angle	Pipe	Pipe OD	Hole	Connector	Up (_)	Ref
Rim	483.85'							
Reducer								
Invert 1	481.02'	0°	12" RCP B WALL	16"	18"	Hole 18	0"	P1
Invert 2	481.05'	106°	12" RCP B WALL	16"	18"	Hole 18	0.375"	P1
Invert 3	481.05'	246°	12" RCP B WALL	16"	18"	Hole 18	0.375"	P1
Invert 4								
Invert 5								
Invert 6								
Invert 7								
Invert 8								

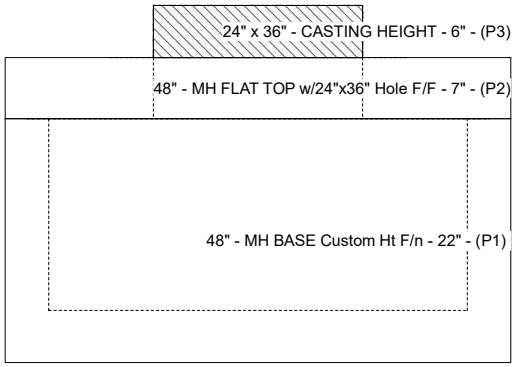

Cast (Int. Dim.) - Interior Dimensions

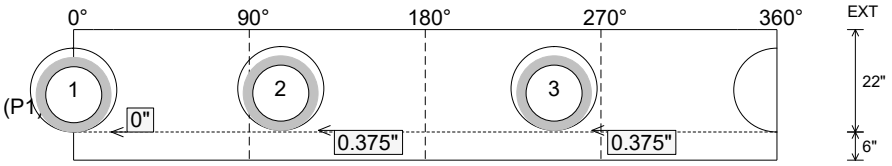

Submittal Drawing
6/27/2026 5:09:05 PM

SUBMITTAL
APPROVED BY: