Job Name: 26-2038 - Sturgis Municipal Airport-Ph2 Job Location: Sturgis, KY Contractor: M. Bowling, Inc.	Plant: 100 7/31/2026 11:12:10 AM	Tech: Jared - F PC: A. Chambers	

Structure ID: C1 DBI2

P1 BX3648-08BAVF BOX BASE 8inW, 8inF, Variable Ht T/n

P3) 36" x 48" - P.I.P. - BY OTHERS - 8"	0 lb
P2) 36" x 48" - BOX RISER 8inW, Variable Ht F/G - 40"	5309 lb
P1) 36" x 48" - BOX BASE 8inW, 8inF, Variable Ht T/n - 60"	8535 lb
1) CASTING - HOE KY-398 SET (DBI 2)	398 lb
2) 36" x 48" - Conseal CS-102 1.00"	0 lb
1) Hole - 48	0 lb
1) Hole - 40	0 lb
1) Hole - 10	0 lb
Structure Total:	14242 lb

Structure Notes: .
1. KYTC DBI TYPE 2 / ASTM C913 SPECIFICATIONS.
2. CONCRETE = 4,000 PSI AT 28 DAYS.
3. STUB #5 BARS 20" OUT TOP OF WALLS (SPA@12"C/C)
4. CASTING SUPPLIED BY ICAST (HOE KY-398 SET (DBI 2)).
.
REINFORCING PER ASTM A615 (GRADE 60).
- WALLS (As .31) #5 BARS AT 12" C.C.E.W.
- FLOOR (As .31) #5 BARS AT 12" C.C.E.W.

Rim: 368.18' Rim to Invert: 8.53' Slack: 0.36" Sump: 6" Step Position:

Position	Elev	Angle	Ext. (cw)	Pipe	Pipe OD	Connector	Hole	Horz Size	Up (_)	Offset
Invert 1	359.65'	90°	32"	36" RCP B WALL	44"	Hole 48	48"	48"	0"	0"
Invert 2	359.85'	270°	32"	30" RCP B WALL	37"	Hole 40	40"	40"	3.375"	0"
Invert 3										
Invert 4										
Invert 5										
Invert 6										
Invert 7										
Invert 8										

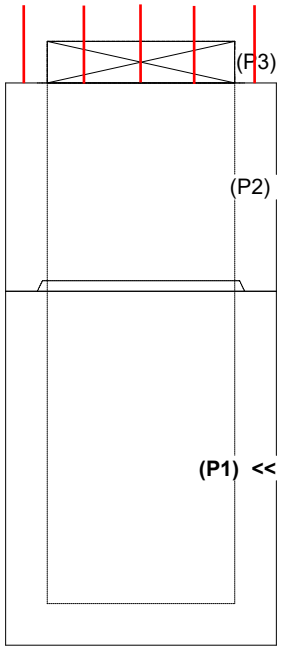

RIGHT-SIDE UP VIEW (int. dimensions)

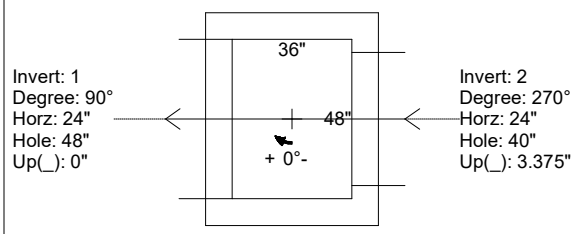

UPSIDE-DOWN VIEW (int. dimenions)

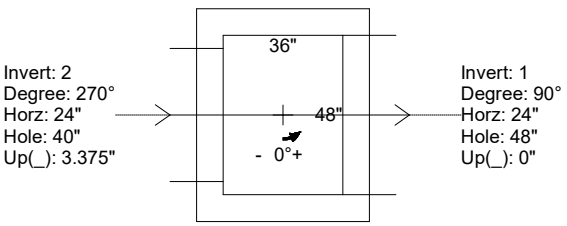

INSIDE WALL DIMENSIONS

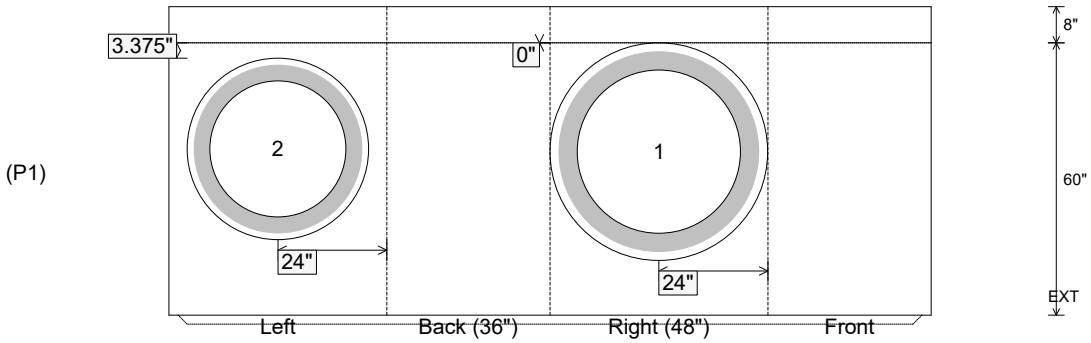

Coating (Int): Coating (Ext):	Seam Up: Tongue Seam Dn: n/a	Wall Thickness: 8" Floor Height: 8"	Height (Int): 60" Height (Ext): 68"	Weight (Net): 8535 lb Volume (Net): 2.18cu.yd