Job Name: 26-2025 - KYTC Warren Co (261510) - Release (1)
Job Location: Bowling Green, KY
Contractor: Mick-Murf Construction Inc.

PC: T. Lewis
TECH: Jared - F
Plant: 100

Structure ID: **CB8A CBIA**

Spec: KYTC	Rim: 568.38'	Sump: 0"	Floor (Bot): 562.043'
Type: CBI TYPE A (10')	Invert: 562.71'	Floor (Top): 562.71'	Overall Height: 6.083'
Size: 24" x 36"	Rim to Invert: 5.67'	Floor Height: 8"	Slack: 3.04"

Structure Notes: .
** KYTC STATE PROJECT **
1. PER KYTC CBI TYPE A / ASTM C913 SPEC'S.
2. CONCRETE = 4,000 PSI AT 28 DAYS.
3. CASTING BY ICAST (HOE KY-206 F/C (KY CBI A))
.
REINFORCING PER ASTM A615 (GRADE 60).
- TOP PHASE (As .62) #5 BARS AT 6" C.C.E.W.
- WALLS (As .31) #5 BARS AT 12" C.C.E.W.
- FLOOR (As .31) #5 BARS AT 12" C.C.E.W.

STRUCTURE SUMMARY:

P3) 24" x 120" - CB INLET KY A 10' TOP RIGHT - 10"	3398 lb
P2) 24" x 120" - CB INLET KY A 10' BOTTOM RIGHT - 18"	5270 lb
P1) 24" x 36" - BOX BASE 8inW, 8inF, Variable Ht - 37"	4490 lb
1) CASTING - HOE KY-206 F/C (KY CBI A)	206 lb
1) 24" x 36" - Conseal CS-102 1.00"	0 lb
2) Hole - 22	0 lb
1) Hole - 18	0 lb
Structure Total:	13364 lb

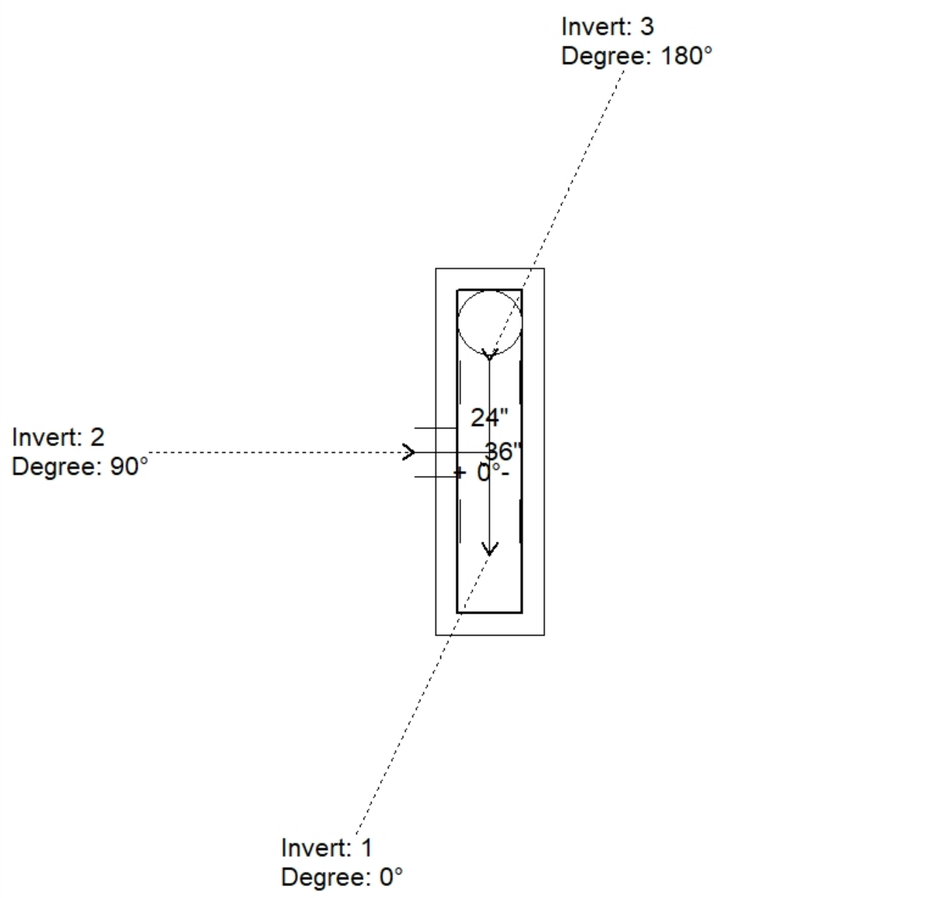

Position	Elev	Angle	Pipe	Pipe OD	Hole	Connector	Up (_)	Ref
Rim	568.38'							
Reducer								
Invert 1	562.71'	0°	18" CMP	19"	22"	Hole 22	-2"	P1
Invert 2	562.79'	90°	15" CMP	16"	18"	Hole 18	-0.54"	P1
Invert 3	562.79'	180°	18" CMP	19"	22"	Hole 22	-1.04"	P1
Invert 4								
Invert 5								
Invert 6								
Invert 7								
Invert 8								

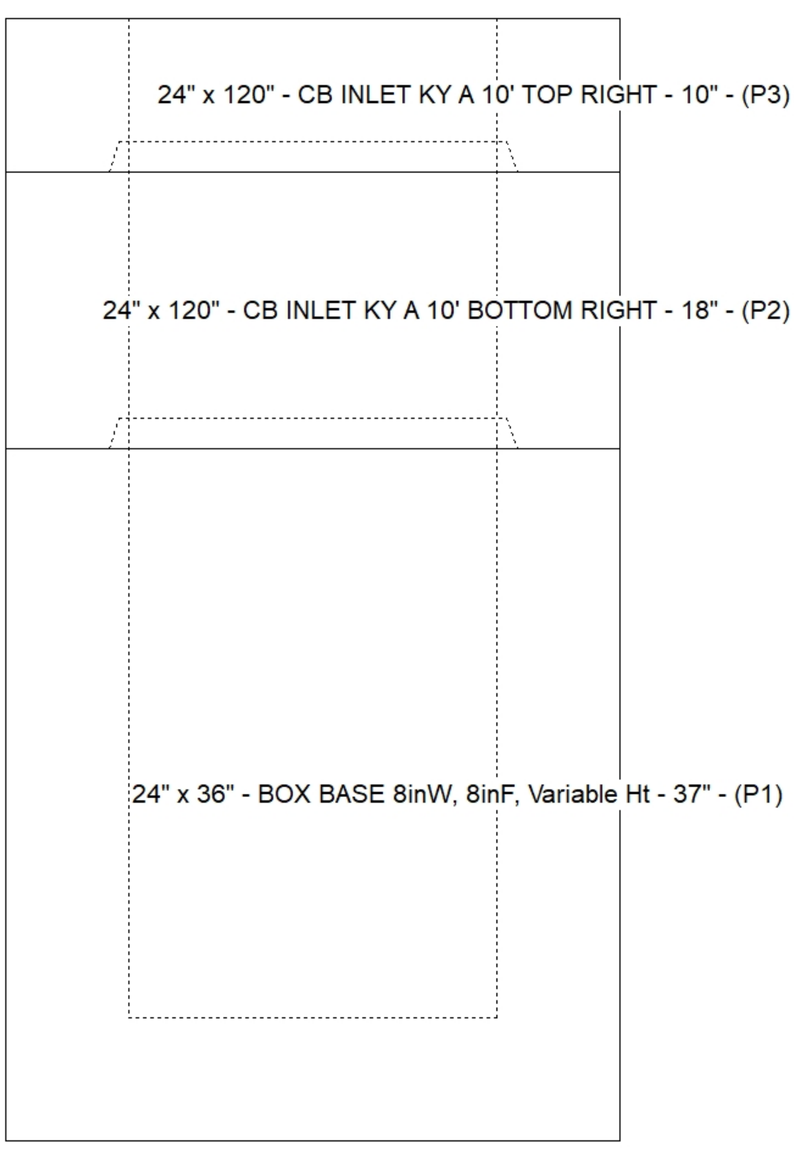

Default - Interior Dimensions

(P1)

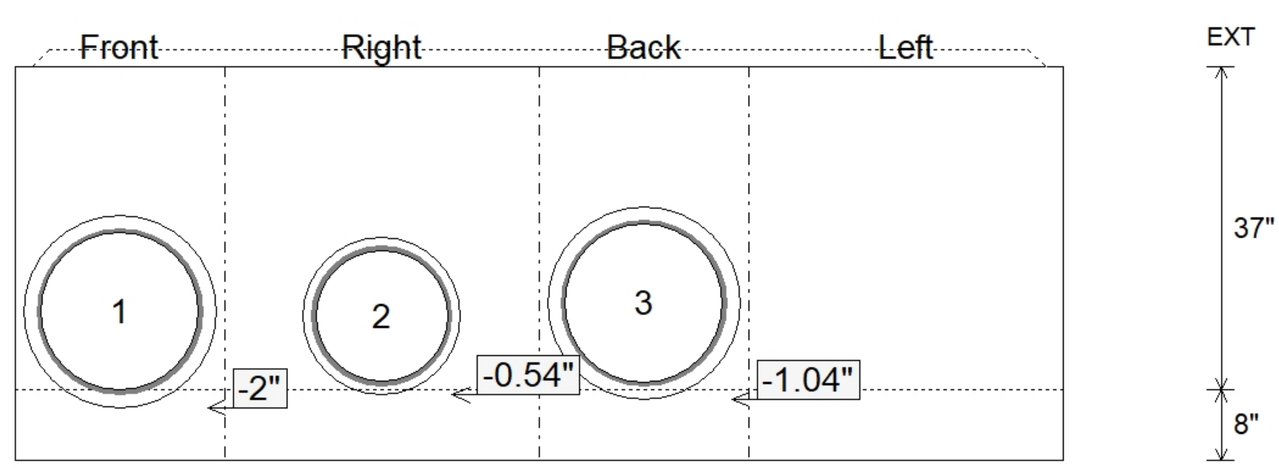

Submittal Drawing
8/27/2026 12:40:49 PM

SUBMITTAL
APPROVED BY: