Job Name: 26-2025 - KYTC Warren Co (261510) Job Location: Bowling Green, KY Contractor: Mick-Murf Construction Inc.	Plant: 100 8/25/2026 12:58:49 PM	Tech: Jared - F PC: T. Lewis	

Structure ID: CB8 CBIA

P1 BX2436-08BVF — BOX BASE 8inW, 8inF, Variable Ht T/n

P3) 24" x 120" - CB INLET KY A 10' TOP SAG F/G - 10"	3398 lb
P2) 24" x 120" - CB INLET KY A 10' BOTTOM SAG T/G - 18"	5270 lb
P1) 24" x 36" - BOX BASE 8inW, 8inF, Variable Ht T/n - 34"	4336 lb
1) CASTING - HOE KY-206 F/C (KY CBI A)	206 lb
1) 24" x 36" - Conseal CS-102 1.00"	0 lb
2) Hole - 22	0 lb
1) Hole - 6	0 lb
Structure Total:	13210 lb

Structure Notes: .
** KYTC STATE PROJECT **
1. PER KYTC CBI TYPE A / ASTM C913 SPEC'S.
2. CONCRETE = 4,000 PSI AT 28 DAYS.
3. CASTING BY ICAST (HOE KY-206 F/C (KY CBI A))
.
REINFORCING PER ASTM A615 (GRADE 60).
- TOP PHASE (As .62) #5 BARS AT 6" C.C.E.W.
- WALLS (As .31) #5 BARS AT 12" C.C.E.W.
- FLOOR (As .31) #5 BARS AT 12" C.C.E.W.

Rim: 568.32' Rim to Invert: 5.43' Slack: 3.16" Sump: 0" Step Position:

Position	Elev	Angle	Ext. (cw)	Pipe	Pipe OD	Connector	Hole	Horz Size	Up (_)	Offset
Invert 1	562.89'	0°	20"	18" CMP	19"	Hole 22	22"	22"	-2"	0"
Invert 2	562.97'	180°	20"	18" CMP	19"	Hole 22	22"	22"	-1"	0"
Invert 3	564.97'	270°	26"	4" HDPE (perf pipe)	4.8"	Hole 6	6"	6"	24"	0"
Invert 4										
Invert 5										
Invert 6										
Invert 7										
Invert 8										

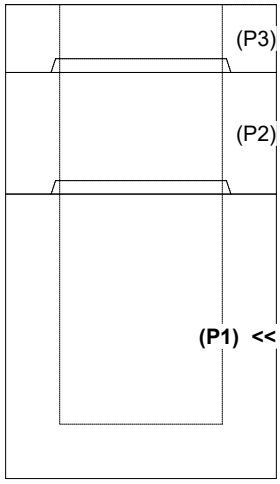

RIGHT-SIDE UP VIEW (int. dimensions)

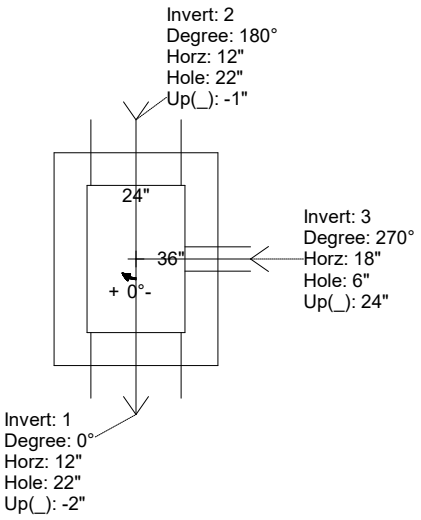

UPSIDE-DOWN VIEW (int. dimenions)

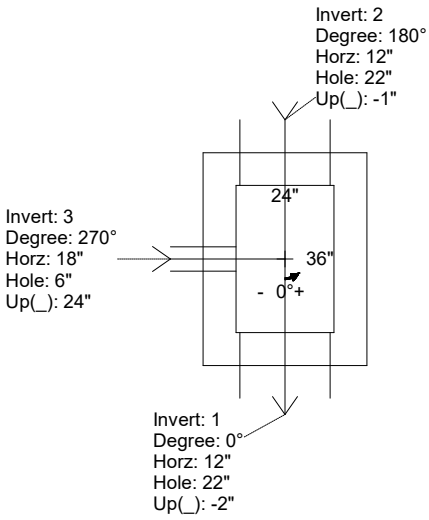

INSIDE WALL DIMENSIONS

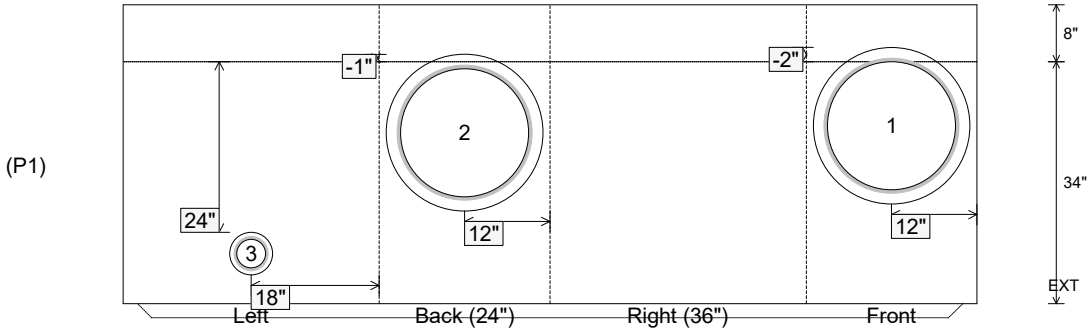

Coating (Int): Coating (Ext):	Seam Up: Tongue Seam Dn: n/a	Wall Thickness: 8" Floor Height: 8"	Height (Int): 34" Height (Ext): 42"	Weight (Net): 4336 lb Volume (Net): 1.11cu.yd