Job Name: 26-1987P6 - Project Nova Job Location: Sullivan, IN 47882 Contractor: McCreary Concrete Products, Inc.	Plant: Beaver Dam 9/3/2026 3:15:48 PM	Tech: J. Coppage PC: M. Sullivan	

Structure ID: 1414

P3 MH108RS78 MH RISER

P6) 24" x 36" - CASTING HEIGHT - 6"	0 lb
P5) 24" x 36" - GRADE RING - 4"	408 lb
P4) 108" - MH FLAT TOP w/24in X 36in ECC Hole - 17"	12900 lb
P3) 108" - MH RISER - 78"	24168 lb
P2) 108" - MH RISER - 96"	29863 lb
P1) 108" - MH BASE - 96"	30589 lb
3) 108" - Conseal CS-102 1.00"	0 lb
2) 24" x 36" - Conseal CS-102 1.00"	0 lb
2) Hole - 90	0 lb
4) Hole - 6	0 lb
22) MH Step ML-10-TDS-NCR - 10"	0 lb
Structure Total:	97928 lb

Structure Notes: .
1. (CASTING PROVIDED BY OTHERS)
2. PER ASTM C478 SPECIFICATIONS.
3. CONCRETE = 4,000 PSI AT 28 DAYS.
4. REINFORCING PER ASTM A615 (GRADE 60).
- TOP SLAB (As .62) #5 BARS AT 6" C.C.E.W..
- RISER/WALLS (As .36)
- FLOOR (As .47) #5 BARS AT 8" C.C.E.W.

Rim: 511.95' Rim to Invert: 24.24' Slack: 0.88" Sump: 7" Step Position: 120

Position	Elev	Angle	Ext. (cw)	Pipe	Pipe OD	Connector	Hole	Horz Size	Up (_)	Offset
Invert 1										
Invert 2										
Invert 3	508.95'	0°	0"	4" HDPE	4.8"	Hole 6	6"	6.003"	64.48"	0"
Invert 4	508.95'	90°	100.531"	4" HDPE	4.8"	Hole 6	6"	6.003"	64.48"	0"
Invert 5	508.95'	180°	201.062"	4" HDPE	4.8"	Hole 6	6"	6.003"	64.48"	0"
Invert 6	508.95'	270°	301.593"	4" HDPE	4.8"	Hole 6	6"	6.003"	64.48"	0"
Invert 7										
Invert 8										

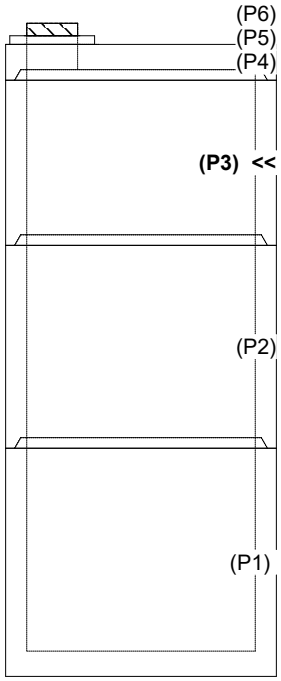

RIGHT-SIDE UP VIEW (int. dimensions)

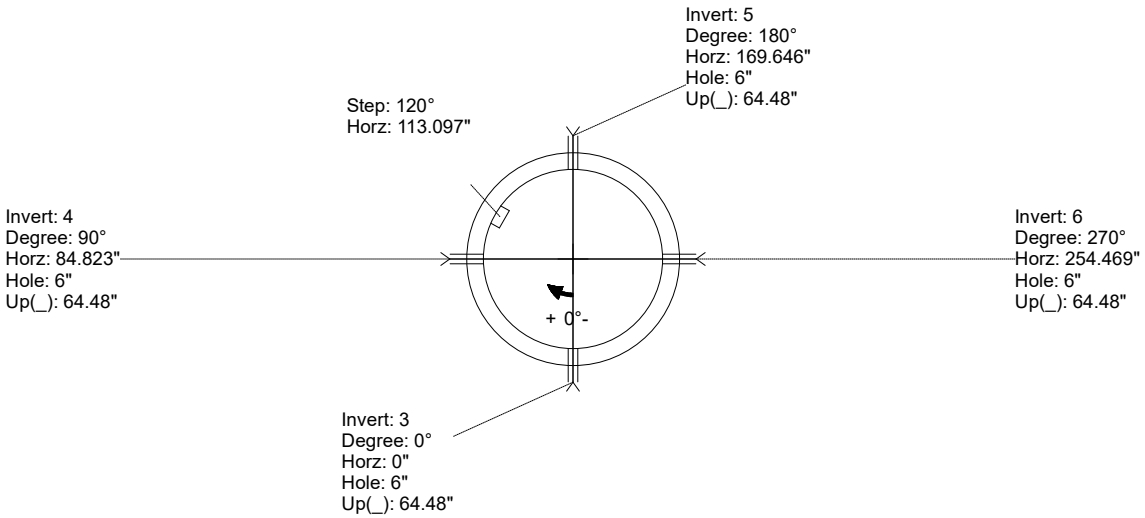

INSIDE WALL DIMENSIONS

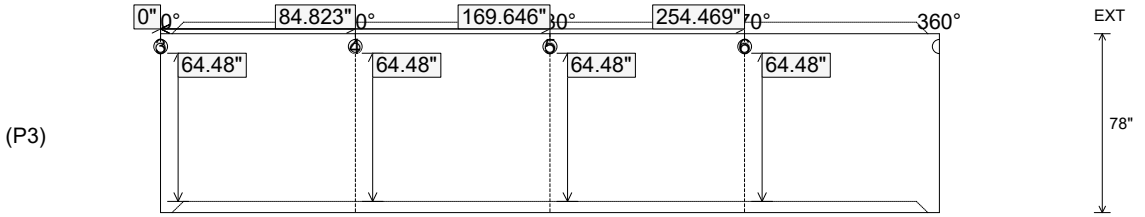

Coating (Int): Coating (Ext):	Seam Up: Tongue Seam Dn: Groove	Wall Thickness: 10" Floor Height: 0"	Height (Int): 78" Height (Ext): 78"	Weight (Net): 24168 lb Volume (Net): 6.17cu.yd