| | | | |
|---|---|---|---|
| Job Name: 26-1987P6 - Project Nova<br>Job Location: Sullivan, IN 47882<br>Contractor: McCreary Concrete Products, Inc. | Plant: Beaver Dam<br>9/3/2026 3:15:46 PM | Tech: J. Coppage<br>PC: M. Sullivan | |

## Structure ID: 1410

**P3 MH108RS54 MH RISER**

| | |
|---|---|
| P6) 24" - CASTING HEIGHT - 0" | 0 lb |
| P5) 24" - GRADE RING - 3" | 202 lb |
| P4) 108" - MH FLAT TOP w/24" ECC Hole - 17" | 10472 lb |
| P3) 108" - MH RISER - 54" | 16703 lb |
| P2) 108" - MH RISER - 60" | 18664 lb |
| P1) 108" - MH BASE - 96" | 31782 lb |
| 3) 108" - Conseal CS-102 1.00" | 0 lb |
| 2) 24" - Conseal CS-102 1.00" | 0 lb |
| 1) Hole - 90 | 0 lb |
| 1) Hole - 76 | 0 lb |
| 1) Hole - 34 | 0 lb |
| 4) Hole - 6 | 0 lb |
| 17) MH Step ML-10-TDS-NCR - 10" | 0 lb |
| Structure Total: | 77824 lb |

Rim: 509.17' Rim to Invert: 18.65' Slack: 0.8" Sump: 7" Step Position: 120

Structure Notes: .
1. (CASTING PROVIDED BY OTHERS)
2. PER ASTM C478 SPECIFICATIONS.
3. CONCRETE = 4,000 PSI AT 28 DAYS.
4. REINFORCING PER ASTM A615 (GRADE 60).
- TOP SLAB (As .62) #5 BARS AT 6" C.C.E.W..
- RISER/WALLS (As .36)
- FLOOR (As .47) #5 BARS AT 8" C.C.E.W.

| Position | Elev | Angle | Ext. (cw) | Pipe | Pipe OD | Connector | Hole | Horz Size | Up (_) | Offset |
|---|---|---|---|---|---|---|---|---|---|---|
| Invert 1 | | | | | | | | | | |
| Invert 2 | | | | | | | | | | |
| Invert 3 | | | | | | | | | | |
| Invert 4 | 506.17' | 0° | 0" | 4" HDPE | 4.8" | Hole 6 | 6" | 6.003" | 33.4" | 0" |
| Invert 5 | 506.17' | 90° | 100.531" | 4" HDPE | 4.8" | Hole 6 | 6" | 6.003" | 33.4" | 0" |
| Invert 6 | 506.17' | 180° | 201.062" | 4" HDPE | 4.8" | Hole 6 | 6" | 6.003" | 33.4" | 0" |
| Invert 7 | 506.17' | 270° | 301.593" | 4" HDPE | 4.8" | Hole 6 | 6" | 6.003" | 33.4" | 0" |
| Invert 8 | | | | | | | | | | |

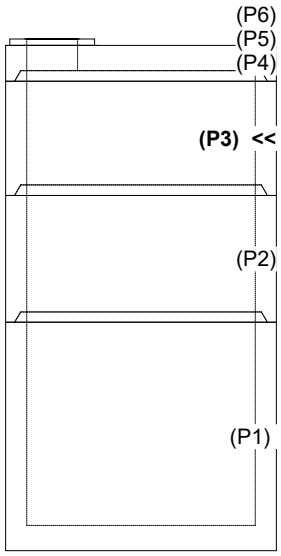


RIGHT-SIDE UP VIEW (int. dimensions)

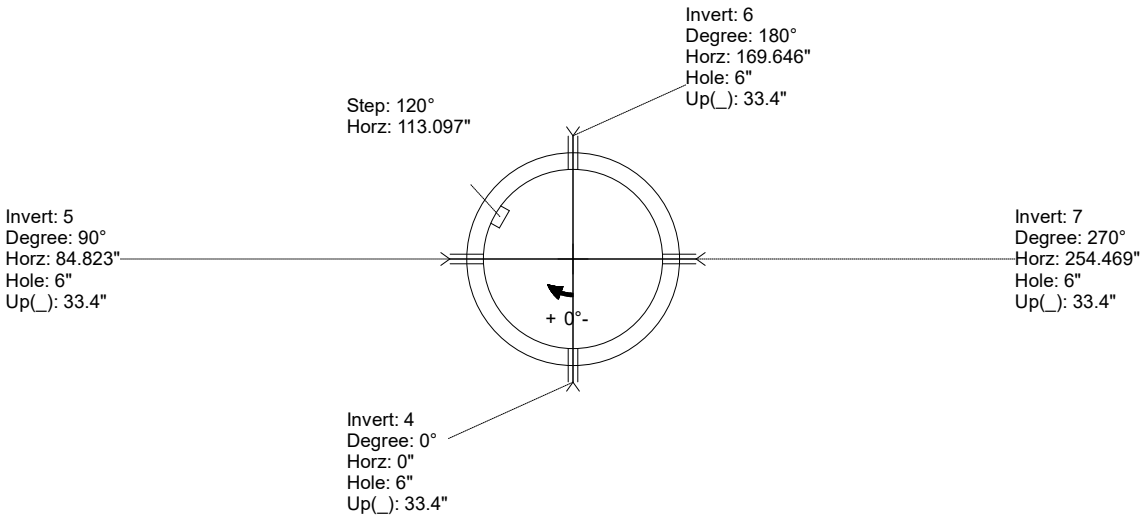


INSIDE WALL DIMENSIONS

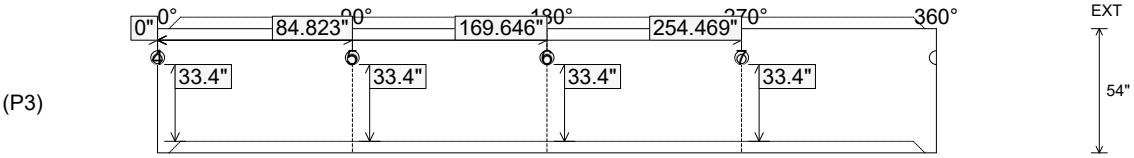


| | | | | |
|---|---|---|---|---|
| Coating (Int):<br>Coating (Ext): | Seam Up: Tongue<br>Seam Dn: Groove | Wall Thickness: 10"<br>Floor Height: 0" | Height (Int): 54"<br>Height (Ext): 54" | Weight (Net): 16703 lb<br>Volume (Net): 4.27cu.yd |