Job Name: 26-1987P6 - Project Nova Job Location: Sullivan, IN 47882 Contractor: McCreary Concrete Products, Inc.	Plant: Beaver Dam 9/3/2026 3:12:38 PM	Tech: J. Coppage PC: M. Sullivan	

Structure ID: 1408

P1 MH108BA96 MH BASE

P5) 24" - CASTING HEIGHT - 0"	0 lb
P4) 24" - GRADE RING - 4"	270 lb
P3) 108" - MH FLAT TOP w/24" ECC Hole - 17"	10472 lb
P2) 108" - MH RISER - 66"	20436 lb
P1) 108" - MH BASE - 96"	34453 lb
2) 108" - Conseal CS-102 1.00"	0 lb
2) 24" - Conseal CS-102 1.00"	0 lb
1) Hole - 76	0 lb
1) Hole - 62	0 lb
2) Hole - 34	0 lb
4) Hole - 6	0 lb
14) MH Step ML-10-TDS-NCR - 10"	0 lb
Structure Total:	65631 lb

Rim: 509.17' Rim to Invert: 14.85' Slack: 1.2" Sump: 6" Step Position: 240

Structure Notes: .
1. (CASTING PROVIDED BY OTHERS)
2. PER ASTM C478 SPECIFICATIONS.
3. CONCRETE = 4,000 PSI AT 28 DAYS.
4. REINFORCING PER ASTM A615 (GRADE 60).
- TOP SLAB (As .62) #5 BARS AT 6" C.C.E.W..
- RISER/WALLS (As .36)
- FLOOR (As .47) #5 BARS AT 8" C.C.E.W.

Position	Elev	Angle	Ext. (cw)	Pipe	Pipe OD	Connector	Hole	Horz Size	Up (_)	Offset
Invert 1	494.32'	0°	0"	60" RCP B WALL	72"	Hole 76	76"	84.304"	0"	0"
Invert 2	494.42'	180°	201.062"	48" RCP B WALL	58"	Hole 62	62"	66.039"	2.2"	0"
Invert 3	497.32'	90°	100.531"	24" RCP B WALL	30"	Hole 34	34"	34.588"	39"	0"
Invert 4	497.32'	270°	301.593"	24" RCP B WALL	30"	Hole 34	34"	34.588"	39"	0"
Invert 5										
Invert 6										
Invert 7										
Invert 8										

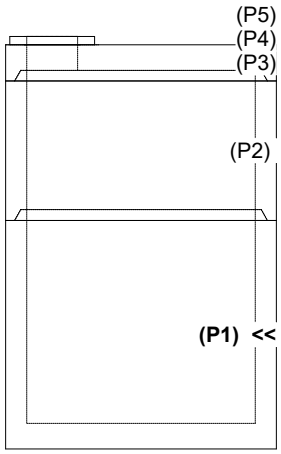

RIGHT-SIDE UP VIEW (int. dimensions)

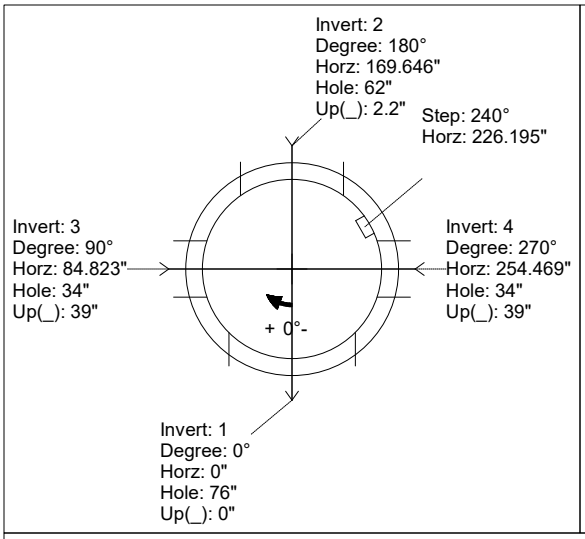

UPSIDE-DOWN VIEW (int. dimenions)

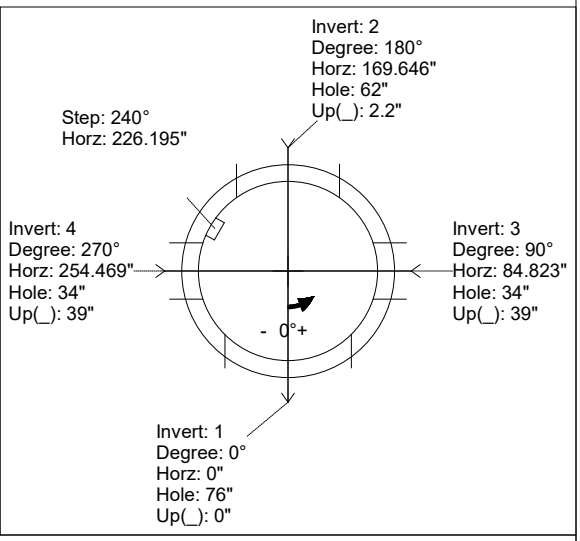

INSIDE WALL DIMENSIONS

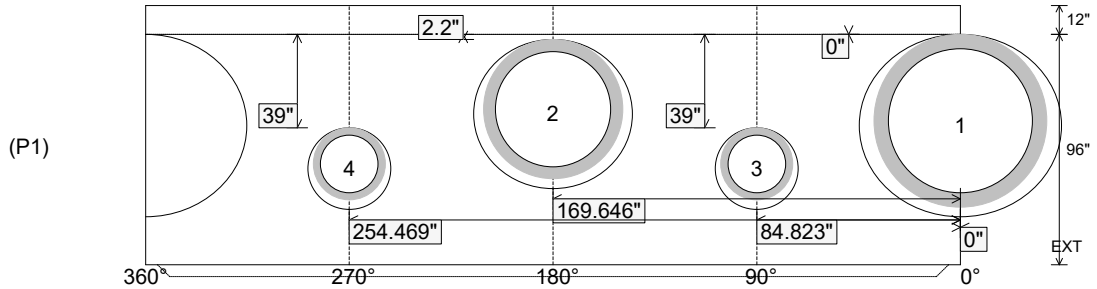

Coating (Int): Coating (Ext):	Seam Up: Tongue Seam Dn: n/a	Wall Thickness: 10" Floor Height: 12"	Height (Int): 96" Height (Ext): 108"	Weight (Net): 34453 lb Volume (Net): 8.8cu.yd