Job Name: 26-1987P6 - Project Nova Job Location: Sullivan, IN 47882 Contractor: McCreary Concrete Products, Inc.	Plant: Beaver Dam 9/29/2026 12:38:03 PM	Tech: J. Coppage PC: M. Sullivan	

Structure ID: 1307

P3 MH108RS54 MH RISER

P5) 24" x 24" - CASTING HEIGHT - 0"	0 lb
P4) 108" - MH FLAT TOP w/24in X 24in ECC Hole - 17"	13186 lb
P3) 108" - MH RISER - 54"	16703 lb
P2) 108" - MH RISER - 84"	25914 lb
P1) 108" - MH BASE - 96"	30690 lb
3) 108" - Conseal CS-102 1.00"	0 lb
1) 24" x 24" - Conseal CS-102 1.00"	0 lb
1) Hole - 90	0 lb
1) Hole - 76	0 lb
1) Hole - 34	0 lb
1) Hole - 44	0 lb
4) Hole - 6	0 lb
19) MH Step ML-10-TDS-NCR - 10"	0 lb
Structure Total:	86492 lb

Rim: 508.96' Rim to Invert: 20.4' Slack: 0.8" Sump: 7" Step Position: 240°

Structure Notes: .
1. (CASTING PROVIDED BY OTHERS)
2. PER ASTM C478 SPECIFICATIONS.
3. CONCRETE = 4,000 PSI AT 28 DAYS.
4. REINFORCING PER ASTM A615 (GRADE 60).
- TOP SLAB (As .62) #5 BARS AT 6" C.C.E.W..
- RISER/WALLS (As .36)
- FLOOR (As .47) #5 BARS AT 8" C.C.E.W.

Position	Elev	Angle	Ext. (cw)	Pipe	Pipe OD	Connector	Hole	Horz Size	Up (_)	Offset
Invert 1										
Invert 2										
Invert 3										
Invert 4										
Invert 5	505.96'	0°	0"	4" HDPE	4.8"	Hole 6	6"	6.003"	30.4"	0"
Invert 6	505.96'	90°	100.531"	4" HDPE	4.8"	Hole 6	6"	6.003"	30.4"	0"
Invert 7	505.96'	180°	201.062"	4" HDPE	4.8"	Hole 6	6"	6.003"	30.4"	0"
Invert 8	505.96'	270°	301.593"	4" HDPE	4.8"	Hole 6	6"	6.003"	30.4"	0"

RIGHT-SIDE UP VIEW (int. dimensions)

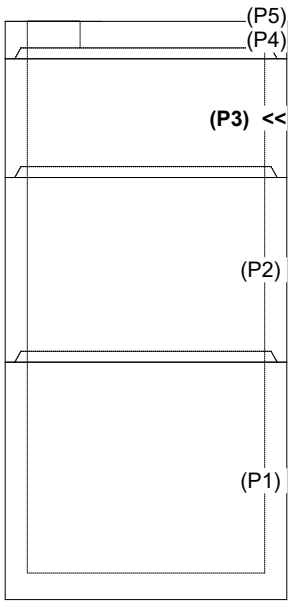

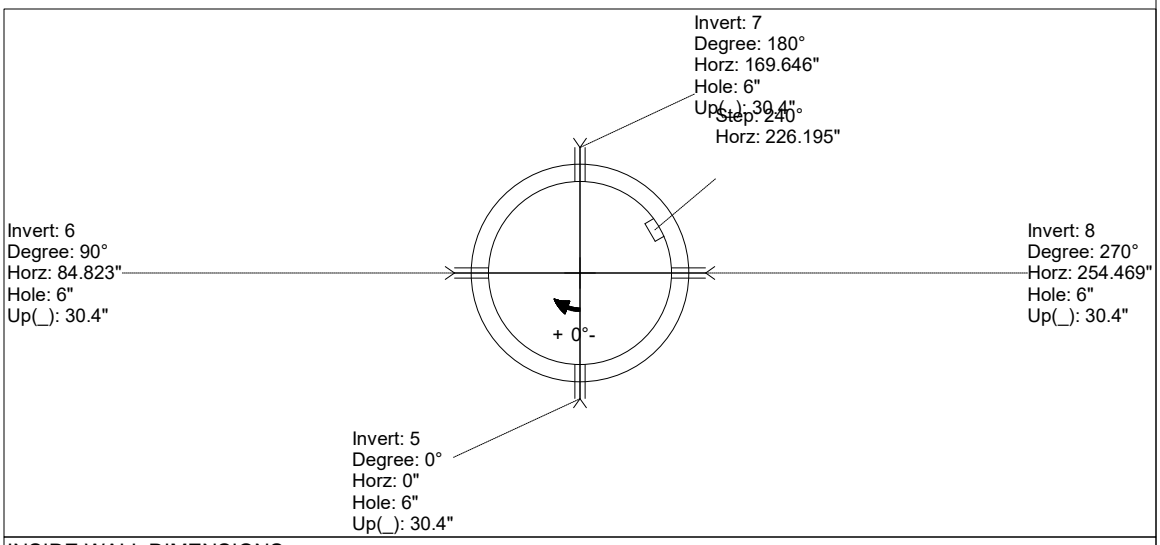

INSIDE WALL DIMENSIONS

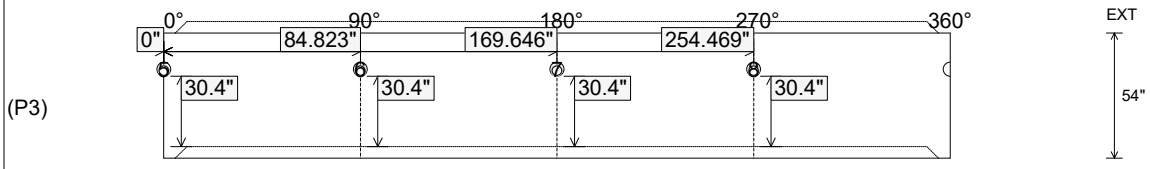

Coating (Int): Coating (Ext):	Seam Up: Tongue Seam Dn: Groove	Wall Thickness: 10" Floor Height: 0"	Height (Int): 54" Height (Ext): 54"	Weight (Net): 16703 lb Volume (Net): 4.27cu.yd