Job Name: 26-1987P6 - Project Nova Job Location: Sullivan, IN 47882 Contractor: McCreary Concrete Products, Inc.	Plant: Beaver Dam 9/29/2026 12:37:34 PM	Tech: J. Coppage PC: M. Sullivan	

Structure ID: 1307

P1 MH108BA96 MH BASE

P5) 24" x 24" - CASTING HEIGHT - 0"	0 lb
P4) 108" - MH FLAT TOP w/24in X 24in ECC Hole - 17"	13186 lb
P3) 108" - MH RISER - 54"	16703 lb
P2) 108" - MH RISER - 84"	25914 lb
P1) 108" - MH BASE - 96"	30690 lb
3) 108" - Conseal CS-102 1.00"	0 lb
1) 24" x 24" - Conseal CS-102 1.00"	0 lb
1) Hole - 90	0 lb
1) Hole - 76	0 lb
1) Hole - 34	0 lb
1) Hole - 44	0 lb
4) Hole - 6	0 lb
19) MH Step ML-10-TDS-NCR - 10"	0 lb
Structure Total:	86492 lb

Rim: 508.96' Rim to Invert: 20.4' Slack: 0.8" Sump: 7" Step Position: 240°

Structure Notes: .
1. (CASTING PROVIDED BY OTHERS)
2. PER ASTM C478 SPECIFICATIONS.
3. CONCRETE = 4,000 PSI AT 28 DAYS.
4. REINFORCING PER ASTM A615 (GRADE 60).
- TOP SLAB (As .62) #5 BARS AT 6" C.C.E.W..
- RISER/WALLS (As .36)
- FLOOR (As .47) #5 BARS AT 8" C.C.E.W.

Position	Elev	Angle	Ext. (cw)	Pipe	Pipe OD	Connector	Hole	Horz Size	Up (_)	Offset
Invert 1	488.56'	0°	0"	72" RCP B WALL	86"	Hole 90	90"	106.392"	0"	0"
Invert 2	489.56'	180°	201.062"	60" RCP B WALL	72"	Hole 76	76"	84.304"	13"	0"
Invert 3	492.56'	93°	103.882"	24" RCP B WALL	30"	Hole 34	34"	34.588"	52"	0"
Invert 4	493.36'	270°	301.593"	36" HDPE	41.7"	Hole 44	44"	45.318"	61.75"	0"
Invert 5										
Invert 6										
Invert 7										
Invert 8										

CAST W/ 4 EA. 8CA18 A-ANCHORS IN THE FLOOR FOR HANDLING

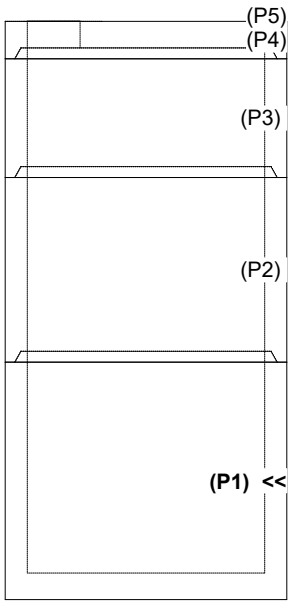

RIGHT-SIDE UP VIEW (int. dimensions)

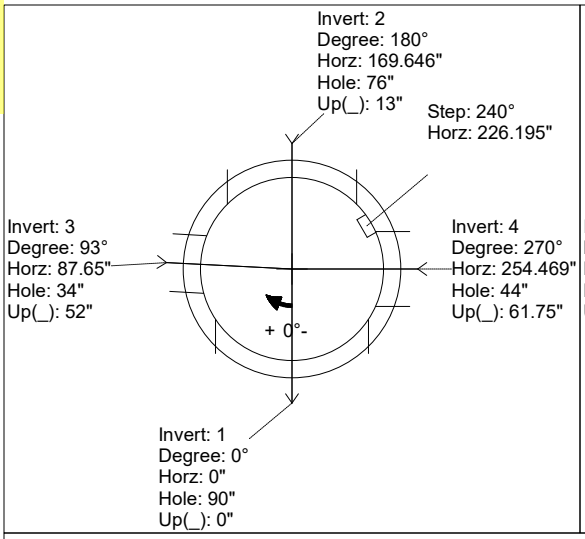

UPSIDE-DOWN VIEW (int. dimenions)

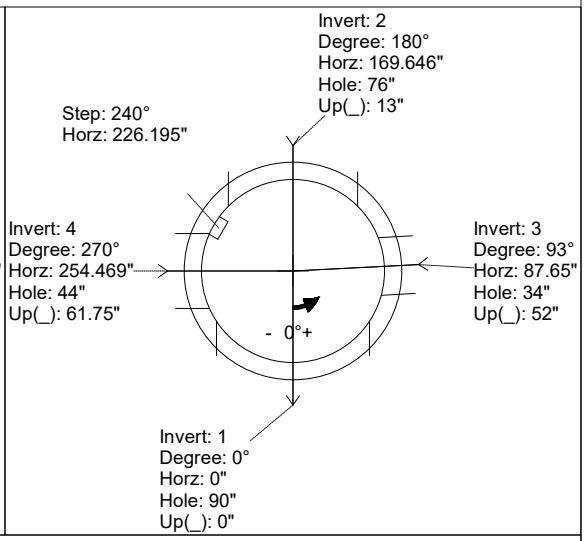

INSIDE WALL DIMENSIONS

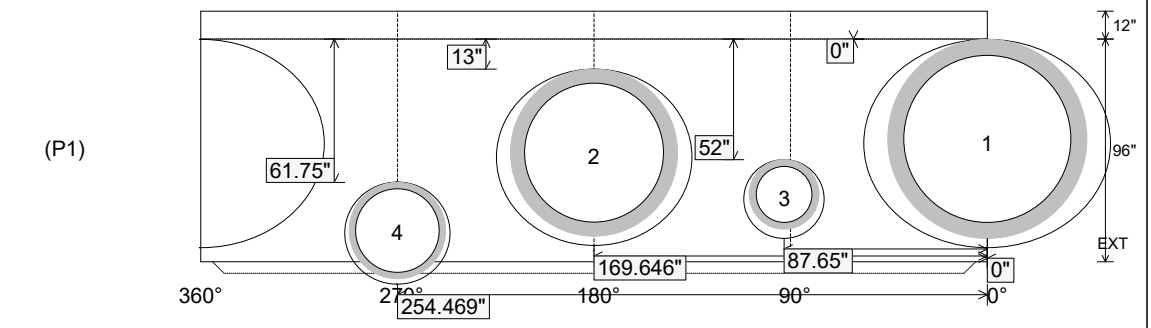

Coating (Int): Coating (Ext):	Seam Up: Tongue Seam Dn: n/a	Wall Thickness: 10" Floor Height: 12"	Height (Int): 96" Height (Ext): 108"	Weight (Net): 30690 lb Volume (Net): 7.84cu.yd